NOTE: BEFORE ATTEMPTING THIS RECALL, REVIEW VIP OR VEHICLE HISTORY TAB TO VERIFY THAT THE RECALL APPLIES TO THIS VEHICLE AND HAS NOT BEEN COMPLETED.

CHRYSLER CORPORATION **Recall Notification**

No. 685
August, 1996

To: All Dodge, Chrysler-Plymouth and Jeep®/Eagle Dealers

Subject: Safety Recall #685 -- ABS Actuator Piston and Pump/Motor Assemblies

Models: Vehicles Listed Below Equipped With a Bendix-10 Antilock Brake System:

- **1991 Through 1993 Model Year Dodge Caravan/Grand Caravan; Plymouth Voyager/Grand Voyager; and Chrysler Town & Country (AS)**
- **Late-1990 Through 1993 Model Year Dodge Dynasty; Chrysler New Yorker, Salon (AC), Fifth Avenue and Imperial (AY)**
- **1991 and 1992 Model Year Eagle Premier and Dodge Monaco (BB)**

Note: 1990 vehicles built through March 26,1990 (MDH 0326XX) are equipped with a Bosch antilock brake system, and therefore, are not included in this recall or the extended warranty.

A small number of the involved vehicles may experience ABS hydraulic control unit actuator piston seal wear and/or hydraulic pump/motor deterioration. To correct this condition, **the ABS system must be tested** and the actuator pistons and/or pump/motor replaced **if necessary**. If testing determines other ABS components are faulty, repairs are to be performed using the revised service and diagnostic procedures manual (81-699-96086) and existing parts. Submit a separate warranty claim using the existing labor operation numbers.

IMPORTANT: Some of the involved vehicles may be in dealer used vehicle inventory. Be sure to complete this recall service on these vehicles before retail delivery. Dealers should perform this recall on vehicles in for service as determined by using DIAL System Function 70 or VIP.

Details of this service action are explained in the following sections.

Service Procedure Videotape

No videotape of the service procedure for this recall will be provided.

Dealer Notification & Vehicle List

Involved dealers: Each dealer to whom involved vehicles were invoiced (or the current dealer at the same street address) **will receive a copy of this dealer recall notification letter and a list of the involved vehicles by first class mail.**

The Vehicle List is arranged in Vehicle Identification Number (VlN) sequence. Owners known to

Chrysler are also listed. The lists are for dealer reference in arranging for service of involved vehicles.

All other dealers: Each Dodge, Chrysler-Plymouth and Jeep/Eagle dealer who does not receive a Vehicle List will receive a copy of this dealer recall notification letter by first class mail.

DIAL System Functions 53, 70 and VIP

All involved vehicles will be entered to DIAL System Functions 53, 70 and VIP at the time of recall implementation for dealer inquiry by VIN as needed.

Parts

Important: Due to the small number of vehicles expected to require repair, no parts will be distributed initially to dealers. Dealers are requested to order Actuator Piston Assembly packages through normal methods only for scheduled repairs. Dealers must contact the STAR Center (1-800-850-STAR Ext. 5) to order Pump/Motor Assemblies. The technician must perform the ABS diagnostic tests prior to contacting the STAR Center and have the results available for review.

Refer to the table below for the appropriate actuator piston assembly package and/or pump/motor assembly:

Model	**Vehicle**	**Actuator Piston**	**Pump/Motor**
		Assembly	**Assembly PN**
		Package PN	
AS	Caravan, Grand Caravan, Voyager, Grand Voyager, Town & Country	R4740086	R4509292
		or	or
		4740086	4509292
AC/AY	Dynasty, New Yorker, Salon, Fifth Avenue, Imperial	R474008	R4723544
		or	or
		4740084	4723544
BB	Premier, Monaco	R4856887	R4584472
		or	or
		4856887	4584472

Each Actuator Piston Assembly Package includes:

1 -- Primary Piston Assembly
1 -- Secondary Piston Assembly
1 -- Snap Ring
1 -- Clip, Hydraulic Assembly Push Rod (4294036)*
1 -- Gasket, Hydraulic Assembly Mounting (4485527)*
1 -- Long Handle Cleaning Aid and Lint Free Cloth

***Hydraulic assembly push rod clips and gaskets for NON-REMANUFACTURED Actuator Piston Packages must be ordered separately.**

Owner Notification and Service Scheduling

All involved vehicle owners known to Chrysler are being notified of the service requirement by first class mail. They are requested to schedule appointments for the service with their dealers only if specific symptoms occur. A copy of the owner notification letter is attached.

Enclosed with each owner notification is an Owner Notification Form. The involved vehicle and recall are identified on the form for owner or dealer reference as needed.

Service Procedure

A. **Test ABS for Proper Operation:**
   1. Connect the DRB Scan Tool to the Data Link Connector (DLC). Be sure to use the appropriate connecting cables for the DRB Scan Tool (Il or Ill) that you are using. Be sure that the DRB contains the latest software and a Super Cartridge or Supercard if necessary.
   2. With the DRB Scan Tool, read, record and then erase all Bendix ABS Diagnostic Trouble Codes (DTC's).

      NOTE: The ignition key must be turned to the OFF position after erasing DTC's to ensure that all DTC's are properly erased inside the Controller - Antilock Brake (CAB).

   3. With the ignition key in the ON position, monitor the DTC display for four minutes.
      - If any DTC's are displayed, they must be diagnosed and repaired in the order that they are listed on page 221 of the Bendix Antilock 9 & 10 Service and Diagnostic Procedures Manual (81-699-96086).
      - If no DTC's are displayed, continue with Step 4.
   4. With the ignition key in the OFF position, pump the brake pedal a minimum of 40 times using about 50 lbs (222 N) of pedal force. A noticeable change in the pedal feel will occur when the accumulators are discharged.

      WARNING: Brake system is under extreme pressure. The Hydraulic Control Unit (HCU) may be charged with hydraulic pressure up to 2200 psi. Failure to de-pressurize the accumulators could result in personal injury and/or damage to painted surfaces. Wear safety goggles when disconnecting system fluid lines.

   5. When a definite increase in pedal pressure is felt, pump the pedal a few additional times to ensure removal of all hydraulic pressure from the brake system.
   6. Install the ABS internal leakage test fixture (Special Tool #6997) per the following procedure:
      A. Remove the complete air cleaner assembly.
      B. Locate the high pressure brake fluid hose going from the HCU to the pump/motor (Figure 1). Remove the high pressure hose tube nut from the fitting on the HCU.

         NOTE: For BB vehicles, remove the hose retainer in order to move the hoses.

      C. Install the test fixture in-line with the high pressure hose (Figures 2 & 3). Screw male end of test fixture into high pressure fitting on HCU and torque to 145 in-lbs (16 N•m).
      D. Install high pressure brake fluid hose into test fixture and torque to 145 in-lbs (16 N.m).
      E. Disconnect the upper (black) HCU 10-way wiring harness connector (Figure 4) and connect it to the test fixture.
      F. Attach the test fixture ground clip to the negative battery terminal.

         WARNING: Connection of test fixture wire harness as described in Steps E

and F above, is required prior to start of test or pump/motor damage will occur.

7. Open the shut-off valve on the test fixture.
8. Turn the ignition key to the RUN position.
9. Allow accumulator pressure to build to its highest steady state value or until the pump shuts off.
10. Close the test fixture shut off valve within 2 seconds of pump shutoff or after reaching a steady state pressure with the pump still running, then start a timer and record both pressure gauge readings.
    - **If the pump shut off and the pump/motor pressure is 1800-2200 psi** , continue with STEP 11.
    - **If the pump did not shut off initially but did shut off after the test fixture valve was closed** , continue with STEP 11.
    - **If the pump continues to run after the test fixture valve is closed and the steady state pressure is LESS THAN 2200 psi** , inspect the low pressure hose and pump supply filter for restriction. A supply filter restriction can be determined by noting inadequate fluid flow from the supply filter when the pump/motor supply (low pressure) hose is disconnected at the pump/motor side of the pump supply filter. If no restriction is found, replace the pump/motor assembly per the instructions in Section C.
    - **If the pump continues to run after the test fixture valve is closed and the steady state pressure is GREATER THAN 2200 psi:**

      WARNING: Turn the ignition key off if pressure exceeds 2500 psi. Damage to pump/motor components will occur at pressures greater than 2500 psi.

      Disconnect the 10-way connector from the test fixture.

      If the pump continues to run, continue with Diagnostic Test #25 in the Bendix Antilock 9 & 10 Service and Diagnostic Procedures Manual (81-699-96086).

      If the pump stops, replace the test fixture pressure switch (PN 4485632) and begin the diagnostic test again. With the ignition key in the Off position, open the test fixture shut-off valve. Pump the brake pedal a minimum of 40 times using approximately 50 lbs (222 N) of pedal force and continue with Step 8.

11. Record the pump/motor side and HCU side pressure readings 120 seconds after closing the test fixture valve and compare with the initial readings.
    - **If the pressure readings on both sides dropped less than 200 psi** , continue with Step 12.
    - **If the HCU side reading dropped more than 200 psi,** replace the master cylinder actuator piston assemblies per the instructions in Section B.
    - **If the pump/motor side reading dropped more than 200 psi or if the pump restarted within the 120 seconds** , replace the pump/motor assembly per the instructions in Section C.

    NOTE: Both of the above repairs may be required.

12. With the ignition key in the Off position, open the test fixture shut-off valve. Pump the brake pedal a minimum of 40 times using approximately 50 lbs (222 N) of pedal force.
13. Turn the ignition key to the RUN position.
14. Allow accumulator pressure to build to its highest steady state value or until the pump shuts off.

15. Close the test fixture shut off valve within 2 seconds of pump shutoff or after reaching a steady state pressure with the pump still running, then start: a timer and record both pressure gauge readings.
    - **If the pump shut off and the pump/motor pressure is 1800-2200 psi** , continue with STEP 16.
    - **If the pump did not shut off initially but did shut off after the test fixture valve was closed** , continue with STEP 16.
    - **If the pump continues to run after the test fixture valve is closed and the steady state pressure is LESS THAN 2200 psi** , inspect the low pressure hose and pump supply filter for restriction. A supply filter restriction can be determined by noting inadequate fluid flow from the supply filter when the pump/motor supply (low pressure) hose is disconnected at the pump/motor side of the pump supply filter. If no restriction is found, replace the pump/motor assembly per the instructions in Section C.
    - **If the pump continues to run after the test fixture valve is closed and the steady state pressure is GREATER THAN 2200 psi:**

      WARNING: Turn the ignition key off if pressure exceeds 2500 psi. Damage to pump/motor components will occur at pressures greater than 2500 psi.

      Disconnect the 10-way connector from the test fixture.

      If the pump continues to run, continue with Diagnostic Test #25 in the Bendix Antilock 9 & 10 Service and Diagnostic Procedures Manual (81-699-96086).

      If the pump stops, replace the test fixture pressure switch (PN 4485632) and begin the diagnostic test again. With the ignition key in the Off position, open the test fixture shut-off valve. Pump the brake pedal a minimum of 40 times using approximately 50 lbs (222 N) of pedal force and continue with Step 8.

16. Record the pump/motor side and HCU side pressure readings 120 seconds after closing the test fixture valve and compare with the initial readings.
    - **If the pressure readings on both sides dropped less than 200 psi** , continue with Step 17.
    - **If the HCU side reading dropped more than 200 psi,** replace the master cylinder actuator piston assemblies per the instructions in Section B.
    - **If the pump/motor side reading dropped more than 200 psi or if the pump restarted within the 120 seconds** , replace the pump/motor assembly per the instructions in Section C.

      NOTE: Both of the above repairs may be required.

17. With the ignition key in the OFF position, **open the test fixture valve** and then pump the brake pedal a minimum of 40 times. A noticeable change in the pedal feel will occur when the accumulators are discharged.

    WARNING: Brake system is under extreme pressure. The hydraulic control unit (HCU) may be charged with hydraulic pressure up to 2200 psi. Failure to de-pressurize the accumulators could result in personal injury and/or damage to painted surfaces. Wear safety goggles when disconnecting system fluid lines.

18. When a definite increase in pedal pressure is felt, pump the pedal a few additional times to ensure removal of all hydraulic pressure from the brake system.
19. Remove the ABS internal leakage test fixture (Special Tool #6997).

A. Disconnect 10-way wiring harness connector from the test fixture (Figure 4) and connect it to the HCU.
B. Remove the high pressure brake fluid hose from the test fixture.
C. Remove the test fixture from the high pressure adapter on the HCU.
D. Install the high pressure hose tube nut on the fitting on the HCU and torque to 145 in-lbs (16 N•m).
E. Install the complete air cleaner assembly.

NOTE: For BB vehicles, install the hose retainer.

20. Turn the ignition to the RUN position to energize the pump/motor and pressurize the hydraulic system. Check for leakage at the HCU.
21. With the ignition key in the OFF position, pump the brake pedal a minimum of 40 times. A noticeable change in the pedal feel will occur when the accumulators are discharged.

    WARNING: Brake system is under extreme pressure. The hydraulic control unit (HCU) may be charged with hydraulic pressure up to 2200 psi. Failure to de-pressurize the accumulators could result in personal injury and/or damage to painted surfaces. Wear safety goggles when disconnecting system fluid lines.

22. Check the brake fluid level in the HCU reservoir and adjust as necessary.
23. No further action is necessary, return the vehicle to the customer.

B. **Replace the HCU Actuator Piston Assemblies:**

1. With the ignition key in the OFF position, **open the test fixture valve** and then pump the brake pedal a minimum of 40 times. A noticeable change in the pedal feel will occur when the accumulators are discharged.

   WARNING: Brake system is under extreme pressure. The hydraulic control unit (HCU) may be charged with hydraulic pressure up to 2200 psi. Failure to de-pressurize the accumulators could result in personal injury and/or damage to painted surfaces. Wear safety goggles when disconnecting system fluid lines.

2. When a definite increase in pedal pressure is felt, pump the pedal a few additional times to ensure removal of all hydraulic pressure from the brake system.
3. Remove the windshield washer fluid bottle, if necessary.
4. Disconnect the two 10-way electrical connectors from the HCU and the test fixture.
5. Remove the high pressure hose fitting from the test fixture and then remove the test fixture from the HCU.
6. Disconnect the pump supply (low pressure) hose from the HCU or pump supply filter.
7. Cap all openings on brake fluid reservoir and HCU.
8. Disconnect the four brake tubes from the HCU.
9. Remove the instrument panel sight shield from below the steering column, if necessary.
10. From under the instrument panel, remove the retainer clip from the brake pedal pin. Discard the old retainer clip, a new clip must be used when the HCU is reinstalled.
11. Remove the four (4) HCU mounting nuts from the HCU studs, located under the instrument panel.
12. For AS body vehicles, disconnect the throttle position sensor (TPS) electrical connector.
13. Remove the HCU from the vehicle.
14. Remove as much brake fluid as possible from the HCU reservoir.
15. Secure the HCU by its bracket extension in a vice. Do not over tighten.
16. Remove the flange gasket from the HCU mounting bracket or the dash panel.
17. Loosen the mounting bracket from the HCU assembly enough to separate the black dust boot from the master cylinder housing, then tighten the bracket.
18. Turn the dust boot inside out and pull out of the way. Then, place a 1/2" box end wrench

over a lower mounting stud (Figure 5). Place a nut on the stud and fully engage all threads. Align the wrench with the input rod bearing.

19. Push in on the wrench against the input rod bearing, moving the bearing inward approximately 1/4" to relieve the bearing load from the snap ring.
20. While holding the piston in, rotate the snap ring so one end is near the 12 o'clock position. Place a small screwdriver in the 12 o'clock keyway in the actuator bore (Figure 5). Pry the snap ring down and out of the groove with the screwdriver and pull the snap ring out of the end of the actuator.

    NOTE: It may be helpful to have a screwdriver with a bent tip to remove the snap ring.

21. Slowly release the wrench from the bearing, allowing the primary piston to pop out of the actuator. Catch any fluid from the master cylinder in a suitable container.
22. Slowly pull the primary piston assembly out of the actuator bore. Keep the assembly as straight as possible. Do not pull forcefully. If piston catches in the bore, push the piston back into the bore a short distance to align it, then try to remove it again.

    NOTE: If the piston will not come out of the bore, the actuator housing must be replaced.

23. Remove the HCU from the vice and place it, stud side down, lint-free bench surface.
24. Place a cloth over the outlet ports of the assembly. While holding the cloth, apply compressed air pressure (regulated to about 20 psi) to the front of the actuator to remove the secondary piston assembly from the bore (Figure 6).
25. Place the HCU back into the vice and clamp securely.
26. Using the provided long handle cleaning aid and lint-free cloth, apply clean brake fluid, which conforms to DOT 3 specifications, to the cloth and thoroughly clean the bore of the HCU. Wipe the entire circumference of the bore and work any particles toward the open end of the bore. Flush the bore, after wiping, with clean brake fluid.
27. Lubricate the cup seals, flat ring seals and O-rings of the new piston assemblies with clean brake fluid.
28. Install the secondary piston assembly, spring end first, into the actuator. Make sure that the cup seal is not folded back or twisted. Push the secondary piston in until the rear of the piston is flush with the actuator bore opening (Figure 7).
29. Position the caged spring at the end of the primary piston assembly over the pin on the rear of the secondary piston assembly (Figure 7).
30. Slowly push both piston assemblies into the actuator bore.

    CAUTION: Do not cut, nick or twist any seals or the unit will not function properly.

31. Place the provided snap ring over the actuator push rod and bearing.
32. Push the piston assemblies all the way into the bore.
33. Place a 1/2" box end wrench over a lower mounting stud (Figure 8). Place a nut on the stud and fully engage all threads. Align the wrench with the input rod bearing.
34. Push in on the wrench against the bearing, moving the bearing inward approximately 1/4" to compress the springs, until the shoulder of the bearing is past the snap ring groove.
35. Rotate the HCU so that the bore keyway is at the top (12 o'clock) position.
36. Position the snap ring so that one end is in the 10 o'clock position and the other end is at the 8 o'clock position. The snap ring must cover the keyway.
37. Place the 10 o'clock end of the snap ring into the snap ring groove. Then, using a flat blade screwdriver, push the snap ring into the groove, working in a clockwise direction. Make sure the entire snap ring is completely seated in the groove.

38. Slowly release the wrench, and then remove the nut and wrench from the HCU lower stud.
39. Loosen the mounting bracket from the HCU. Install the rubber dust boot over the HCU bore flange and seat the retaining ring into the groove. Tighten the mounting bracket.
40. Rotate the push rod into the position shown in Figure 9, then install the HCU in the vehicle using the provided gasket.
41. Install the four HCU stud nuts and tighten to 21 ft-lbs (28 N•m).
42. Coat the surface of the brake pedal pin with lubriplate or equivalent.
43. Connect the push rod to the pedal pin and install the provided retainer clip. Make sure that the brake light switch is properly adjusted.

    IMPORTANT: The HCU push rod must be assembled to the brake pedal pin as shown in Figure 9.

44. Reinstall the instrument panel sight shield, if necessary.
45. Install the four brake tubes. Tighten the fittings to 145 in-lbs (16 N•m) for AC/AY/BB vehicles or to 155 in-lbs (17 N•m) for AS vehicles.
46. For AS body vehicles, reconnect the TPS electrical connector.
47. Install the windshield washer fluid bottle, if necessary.
48. **IF THE PUMP/MOTOR ASSEMBLY MUST ALSO BE REPLACED, skip to Section C.Step 9.**
49. Install the pump/motor supply (low pressure) hose and tighten the clamp to 10 in-lbs (1 N•m).
50. Install the pump/motor high pressure hose and tighten to 145 in-lbs (16 N•m).
51. Connect the two 10-way HCU electrical connectors.
52. Fill the HCU brake fluid reservoir to the top of the screen on the reservoir filter/strainer with clean brake fluid conforming to DOT 3 specifications (Figure 10).
53. If the pump/motor assembly does not require replacement, continue with Section D.

C. **Replace Pump/Motor Assembly:**

1. With the ignition key in the OFF position, **open the test fixture valve** and then pump the brake pedal a minimum of 40 times. A noticeable change in the pedal feel will occur when the accumulators are discharged.

   WARNING: Brake system is under extreme pressure. The hydraulic control unit (HCU) may be charged with hydraulic pressure up to 2200 psi. Failure to de-pressurize the accumulators could result in personal injury and/or damage to painted surfaces. Wear safety goggles when disconnecting system fluid lines.

2. When a definite increase in pedal pressure is felt, pump the pedal a few additional times to ensure removal of all hydraulic pressure from the brake system.
3. Disconnect any routing clips which attach the high and/or low pressure fluid lines to the body or vehicle components.
4. Disconnect the low pressure hose (Figure 11) at the HCU.
5. Disconnect the high pressure hose assembly from the test fixture.
6. Disconnect the 10-way wiring connector from the test fixture and reconnect it to the HCU.
7. Remove the test fixture (Special Tool #6997).
8. Cap all openings on the reservoir and HCU to prevent brake fluid from leaking.
9. Disconnect all electrical connectors (including pump/motor) that run across the engine compartment in the area around the pump/motor assembly high and low pressure hoses.
10. Remove the pump/motor assembly front heat shield to mounting bracket bolt. Remove the heat shield from the pump/motor assembly (Figure 12).
11. Lift pump/motor assembly from mounting bracket and remove from vehicle.
12. Remove high and low pressure hoses from pump/motor assembly.

13. Lubricate the high and low pressure hose O-rings with clean brake fluid and position on new pump/motor assembly. Tighten banjo bolt to 124 in-lbs (14 N•m).
14. Position new pump/motor assembly in mounting bracket.
15. Position heat shield over pump/motor on mounting bracket and install attaching bolt.
16. Remove caps from reservoir and HCU openings.
17. Attach high pressure hose to HCU and tighten fitting to 145 in-lbs (16 N•m).
18. Connect low pressure hose to HCU and tighten clamp to 10 in-lbs (1 N•m).
19. Connect pump/motor assembly wiring harness to underhood wiring harness.
20. Reconnect all underhood wiring connectors.
21. Reconnect all routing clips that secure the high and/or low pressure hoses to the body or other components.
22. Proceed to Section D.

D. **Bleed Brakes and Verify Proper System Operation:**

1. **IF THE PRIMARY PISTON ASSEMBLY WAS REPLACED, <u>the brake lines must be bled</u>** using either pressure bleeding or manual bleeding as described on pages 338-339 of the Bendix Antilock 9 & 10 Service and Diagnostic Procedures Manual (81-699-96086).

   NOTE: It is not necessary to bleed the foundation brakes of the vehicle if <u>only</u> the pump/motor assembly has been replaced.

2. Turn the ignition to the RUN position to energize the pump/motor and pressurize the hydraulic system. Check for leakage at the HCU and/or pump/motor.
3. With the ignition key in the OFF position, pump the brake pedal a minimum of 40 times. A noticeable change in the pedal feel will occur when the accumulators are discharged.

   WARNING: Brake system is under extreme pressure. The hydraulic control unit (HCU) may be charged with hydraulic pressure up to 2200 psi. Failure to de-pressurize the accumulators could result in personal injury and/or damage to painted surfaces. Wear safety goggles when disconnecting system fluid lines.

4. Check the brake fluid level in the HCU reservoir and adjust as necessary.
5. Reinstall the air cleaner assembly.
6. With the ignition key in the ON position, <u>monitor the DTC display for four minutes</u>.
   - If any DTC's are displayed, they must be diagnosed and repaired in the order that they are listed on page 221 of the Bendix Antilock 9 & 10 Service and Diagnostic Procedures Manual (81-699-96086).
   - If no DTC's are displayed, continue with Step 7.
7. Using the DRB Scan tool, verify that the stop lamp input reads "ON" when the brake pedal is depressed.
8. Using the DRB scan tool, monitor the accumulator voltage. Depress the brake pedal 40 times. The accumulator voltage should exceed 4.0 volts temporarily just before the pump begins to run.
9. With the brake pedal released, make sure that the boost and primary pressure transducers voltages are both between 0.1 volts and 4.0 volts.
10. Road test the vehicle for a minimum of 5 minutes at various speeds while performing several antilock braking and normal braking stops.
11. With the ignition key in the ON position, check for DTC's.
    - If any DTC's are displayed, they must be diagnosed and repaired in the order that they are listed on page 221 of the Bendix Antilock 9 & 10 Service and Diagnostic Procedures Manual (81-699-96086).

Completion Reporting and Reimbursement

Claims for vehicles which have been serviced must be submitted on the DIAL System. Claims submitted will be used by Chrysler to record recall service completions and provide dealer payments.

Use one of the following labor operation numbers and time allowances:

	Labor Operation Number	Time Allowance
Inspect ABS for proper operation	05685181	0.8 hours
Inspect ABS and replace actuator piston assemblies	05685182	3.2 hours
Inspect ABS and replace pump/motor assembly	05685183	1.8 hours
Inspect ABS and replace actuator piston and pump/motor assemblies	05685184	3.8 hours

Add the cost of the recall parts package(s) plus applicable dealer allowance to your claim.

NOTE: Any other ABS repairs must be performed according to the Bendix Antilock 9 & 10 Service and Diagnostic Procedures Manual and/or applicable Technical Service Bulletins and a separate claim must be filed for reimbursement.

Parts Return

Removed actuator piston assemblies and pump/motor assemblies must be returned to the Warranty Material Return Center**. Timely parts return is critical in assuring an adequate supply of future repair parts.** Dealers will be charged back for parts which are not promptly returned.

Note: See Warranty Administration Manual, Recall Claim Processing Section for complete recall claim processing and material return instructions.

Vehicle Not Available

If a vehicle is not available for service for a known reason, let us know by filling out the pre-addressed Vehicle Disposition Form portion of the Owner Notification Form or describe the reason on a postcard and mail to:

Chrysler Corporation
ClMS 482-00-85
800 Chrysler Drive East
Auburn Hills, Michigan 48326-2757

Following the above procedures will expedite the processing of your claim.

If you have any questions or need assistance in completing this action, please contact your Zone Service Office.

Customer Services Field operations
Chrysler Corporation

CHRYSLER CORPORATION

SAFETY RECALL TO TEST AND REPAIR YOUR VEHICLE'S ANTILOCK BRAKE SYSTEM

Dear Chrysler Vehicle owner:

This notice is sent to you in accordance with the requirements of the National Traffic and Motor Vehicle Safety Act.

Chrysler Corporation has determined that a problem which relates to motor vehicle safety exists in some **1991 through 1993 Dodge Caravan/Grand Caravan, Plymouth Voyager/Grand Voyager and Chrysler Town and Country; late-1990 through 1993 Dodge Dynasty, Chrysler New Yorker, Salon, Fifth Avenue and Imperial; and 1991 and 1992 Dodge Monaco and Eagle Premier vehicles equipped with an antilock brake system (ABS).**

The problem is...

The ABS hydraulic control unit on your Vehicle (identified on the enclosed form), **may experience excessive brake actuator piston seal wear and/or pump-motor deterioration.** If this occurs, the ABS function may be lost and reduced power assist may be experienced during braking. This ***may*** result in increased stopping distance that could result in an accident.

What you should do...

Owners of vehicles that experience any of the following symptoms should contact their dealers ***immediately*** to schedule a service appointment:

• Either the Brake System Warning Light or the Antilock Warning Light remains ***illuminated more than two minutes*** after starting the vehicle; ***or if either light comes on*** at any other time during vehicle operation;

• A ***substantial***increase in ***brake*** pedal force is needed to stop the vehicle; or

• Any other ABS malfunction occurs.

Please bring the enclosed Owner Notification Form with you to your dealer. It explains the required service to the dealer.

If your ABS brake system is operating properly and none of the above symptoms are present, no action is necessary at this time. However, if any of these symptoms appear in the future, contact your dealer for a free repair. ***Keep this letter with your vehicle's other owner information in case you notice any of these conditions in the future.***

What Chrysler and your dealer will do...

Chrysler will test your vehicle's ABS for excessive piston seal wear and possible pump-motor deterioration. If problems ***with these components*** are found at any time during the entire life of your vehicle, ***Chrysler*** will replace these components free of charge. The test will take about one hour to complete. Another one to two hours ***may***be required if components must be replaced. However, additional time may be necessary depending on how dealer appointments are scheduled and processed.

Extended Warranty...

In addition to this recall action, the warranty period on other ABS components in your vehicle is being extended to 10 years or 100,000 miles, which ever occurs first. This means that if any of these other ABS components fail within 10 years or 100,000 miles, your dealer will correct the problem free of charge. This extended warranty' is limited to the same conditions defined in the original warranty and does not include any base brake system components (calipers, pad/shoe linings, etc.). Further, Chrysler will reimburse owners for any previous ABS component expenses incurred within the limits of the extended warranty. Just send the original receipt to:

Chrysler Corporation - Recall #685 Reimbursement
P.O. Box 21-8004
Auburn Hills, MI 48321-8004

If you need

If you have any questions about whether your ABS system is operating properly,

help... contact your dealer.

If you have trouble getting your vehicle repaired, please **call the Chrysler Customer Center, toll free, at 1-800-853-1403**. A representative will assist you in getting your vehicle repaired. If your dealer fails or is unable to remedy this defect without charge and within a reasonable time, you may submit a written complaint to the Administrator, National Highway Traffic Safety Administration, 400 Seventh Street, S.W., Washington, D.C. 20590, or call the Toll Free Auto Safety Hotline at 1-800-424-9393. (Washington, D.C. area residents may call 366-0123.)

We're sorry for any inconvenience, but we are sincerely concerned about your safety. Thanks for your attention to this important matter.

Customer Services Field Operations
Chrysler Corporation
685

Buckle up
for Safety

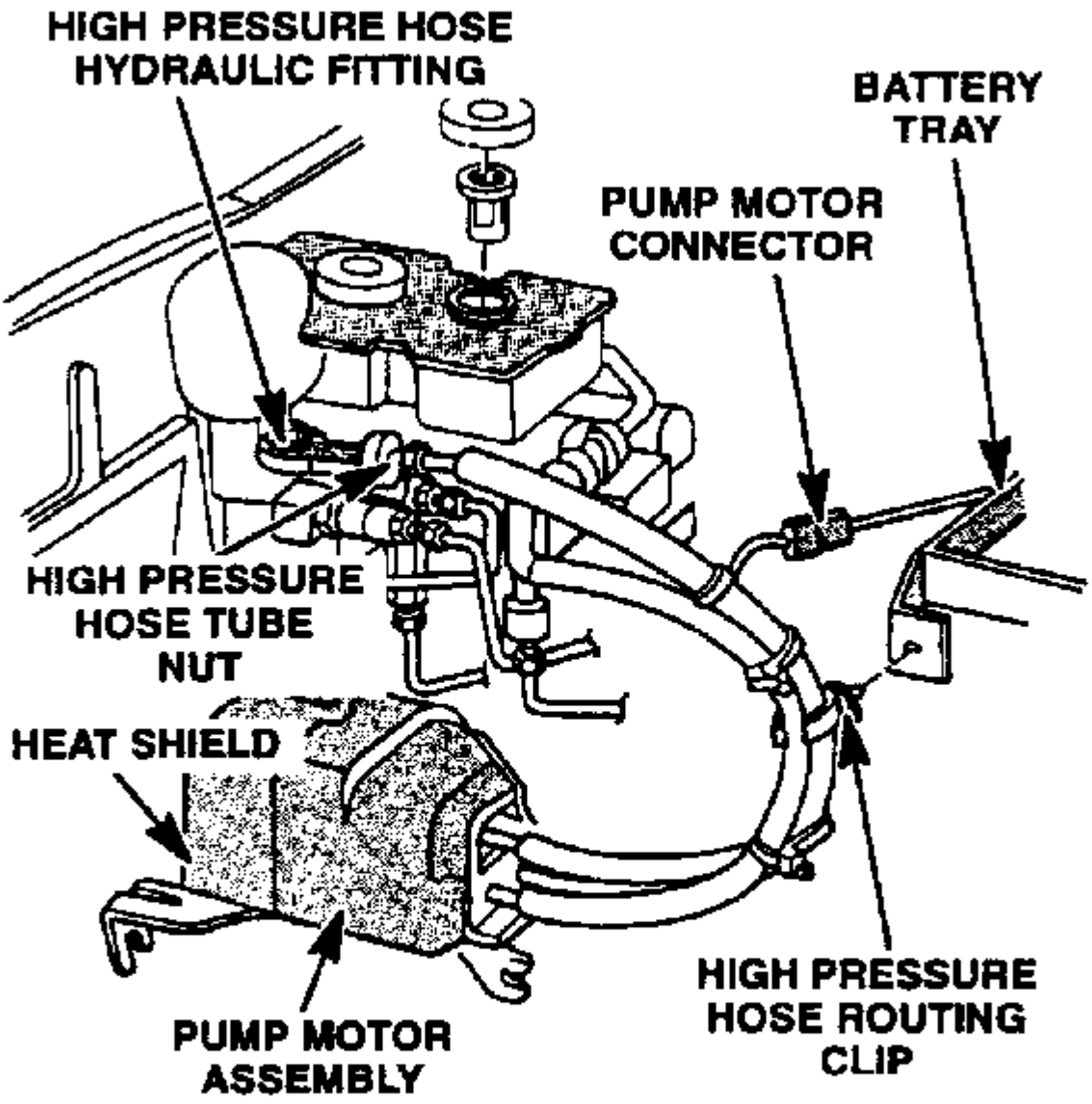

94387–847

Figure 1

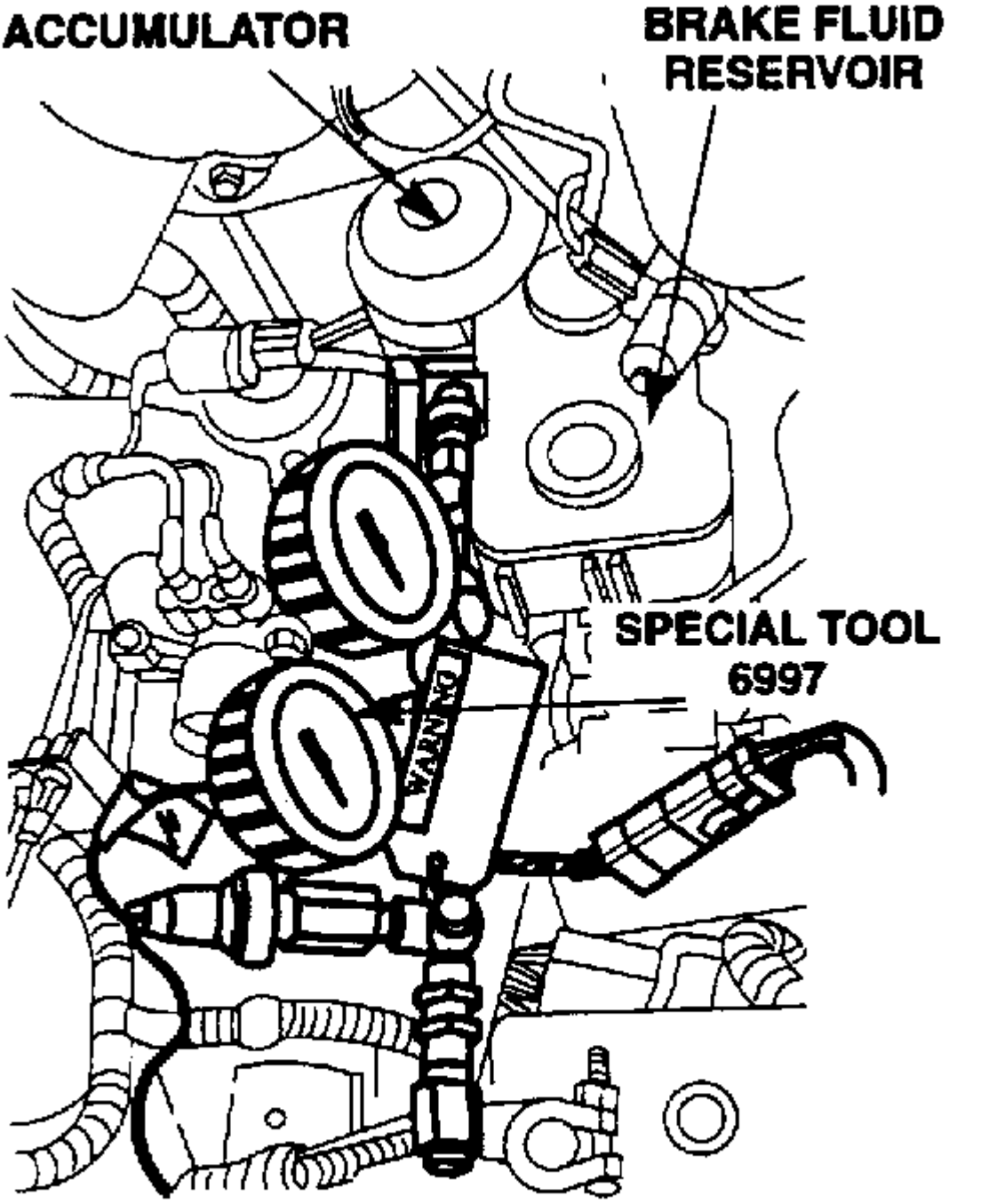
ACCUMULATOR
BRAKE FLUID RESERVOIR
SPECIAL TOOL 6997
WARNING
94387-597

Figure 2

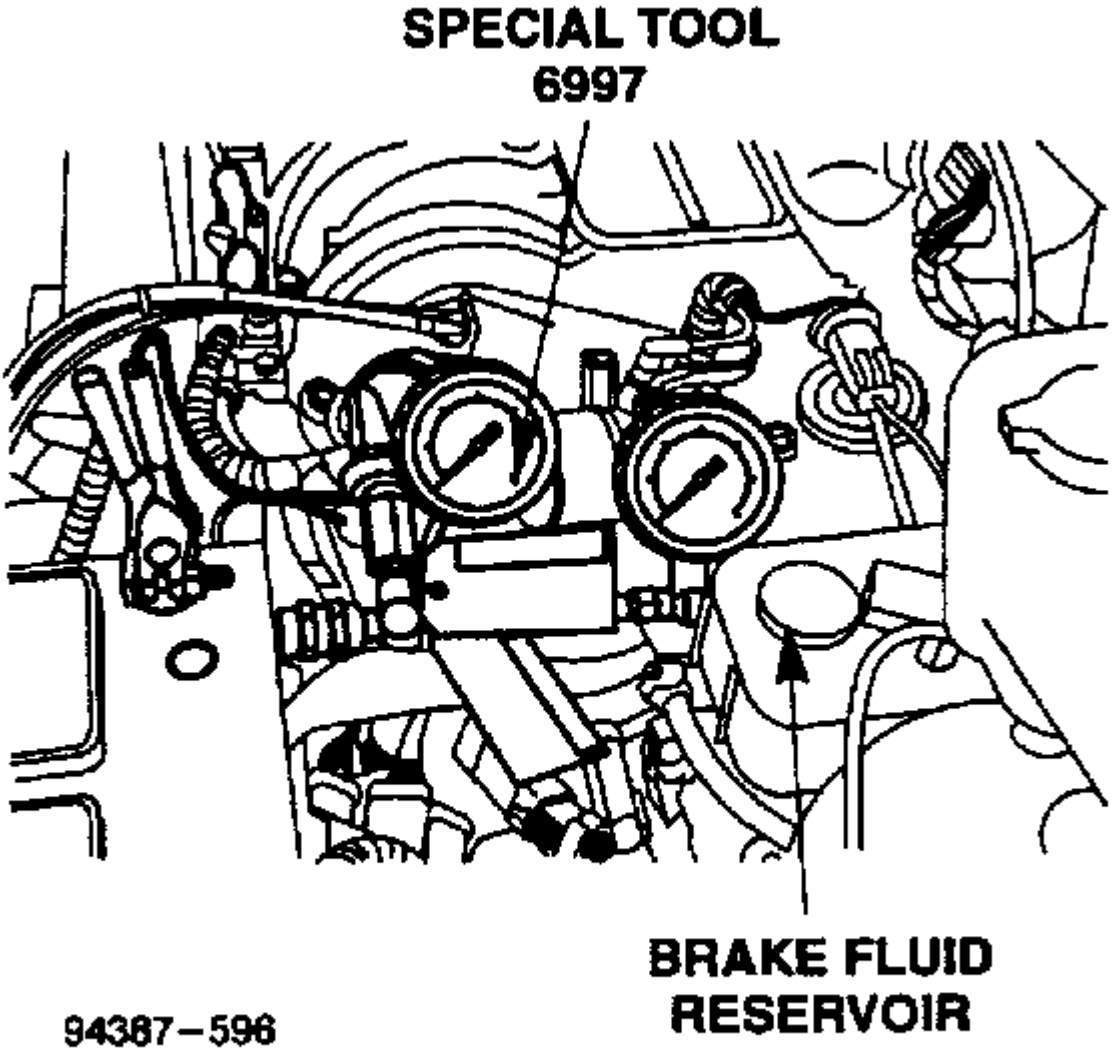

Figure 3

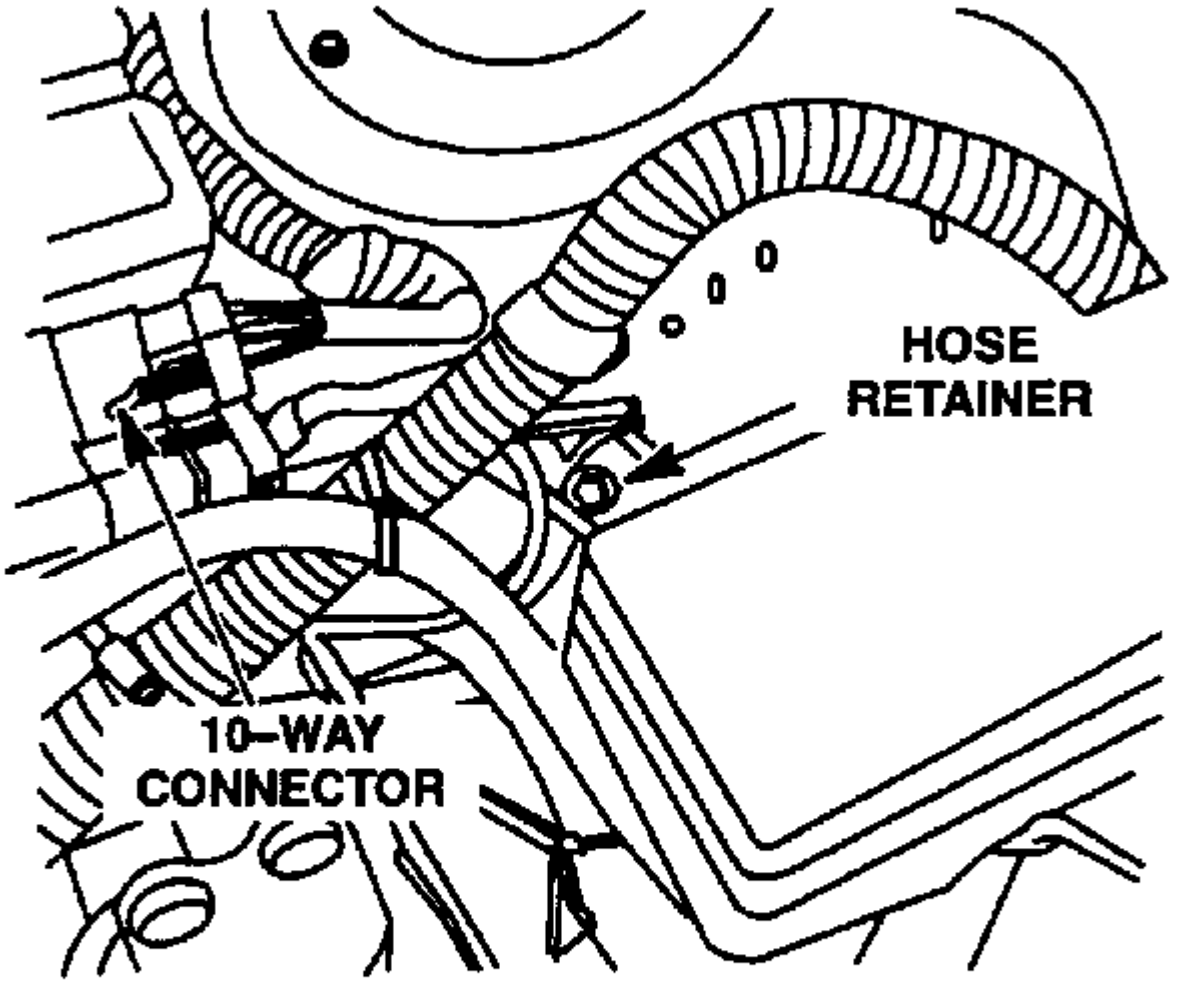

94387–980

Figure 4

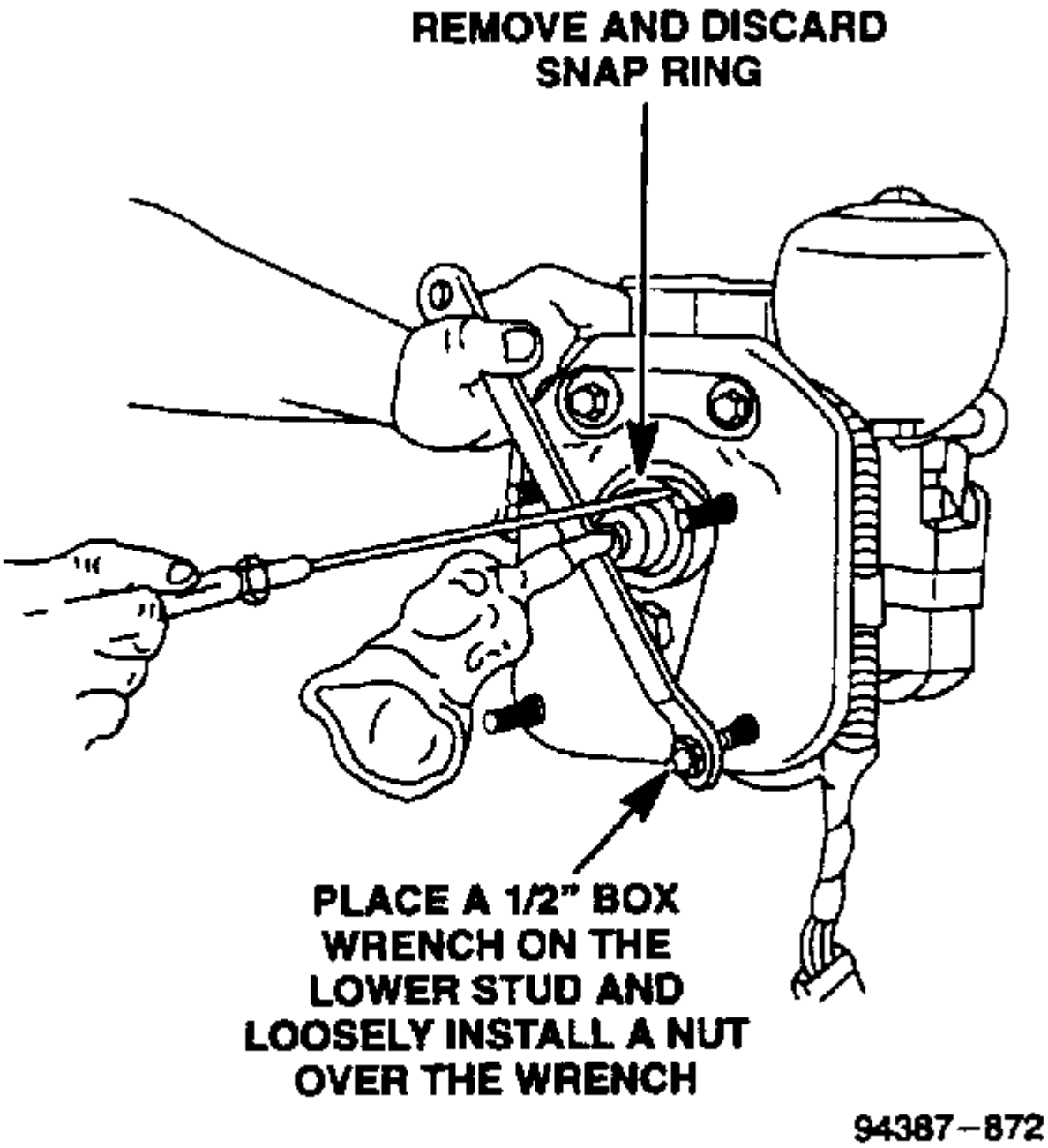
REMOVE AND DISCARD
SNAP RING
PLACE A 1/2" BOX
WRENCH ON THE
LOWER STUD AND
LOOSELY INSTALL A NUT
OVER THE WRENCH
94387-872

Figure 5

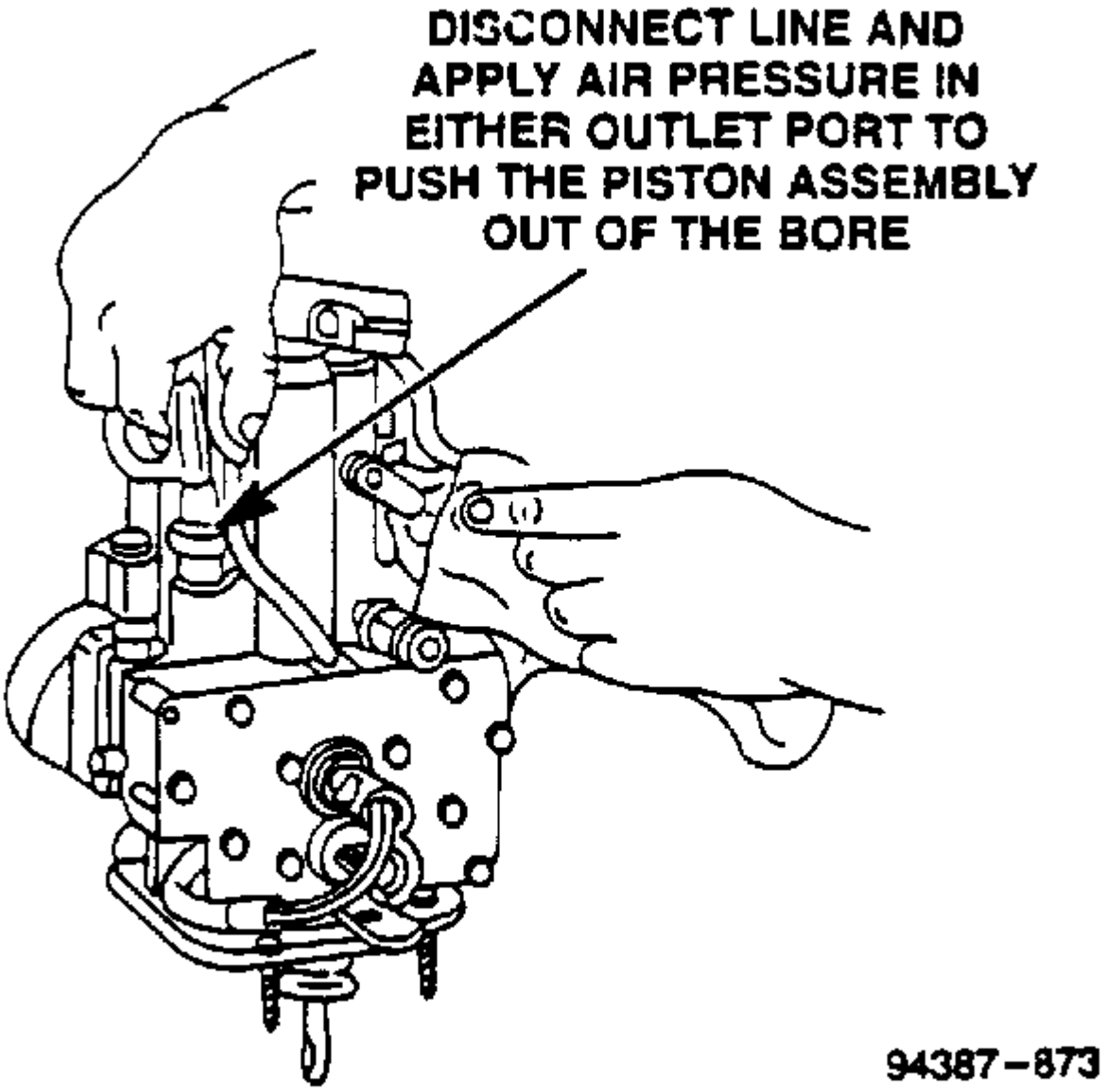
DISCONNECT LINE AND
APPLY AIR PRESSURE IN
EITHER OUTLET PORT TO
PUSH THE PISTON ASSEMBLY
OUT OF THE BORE
94387-873

Figure 6

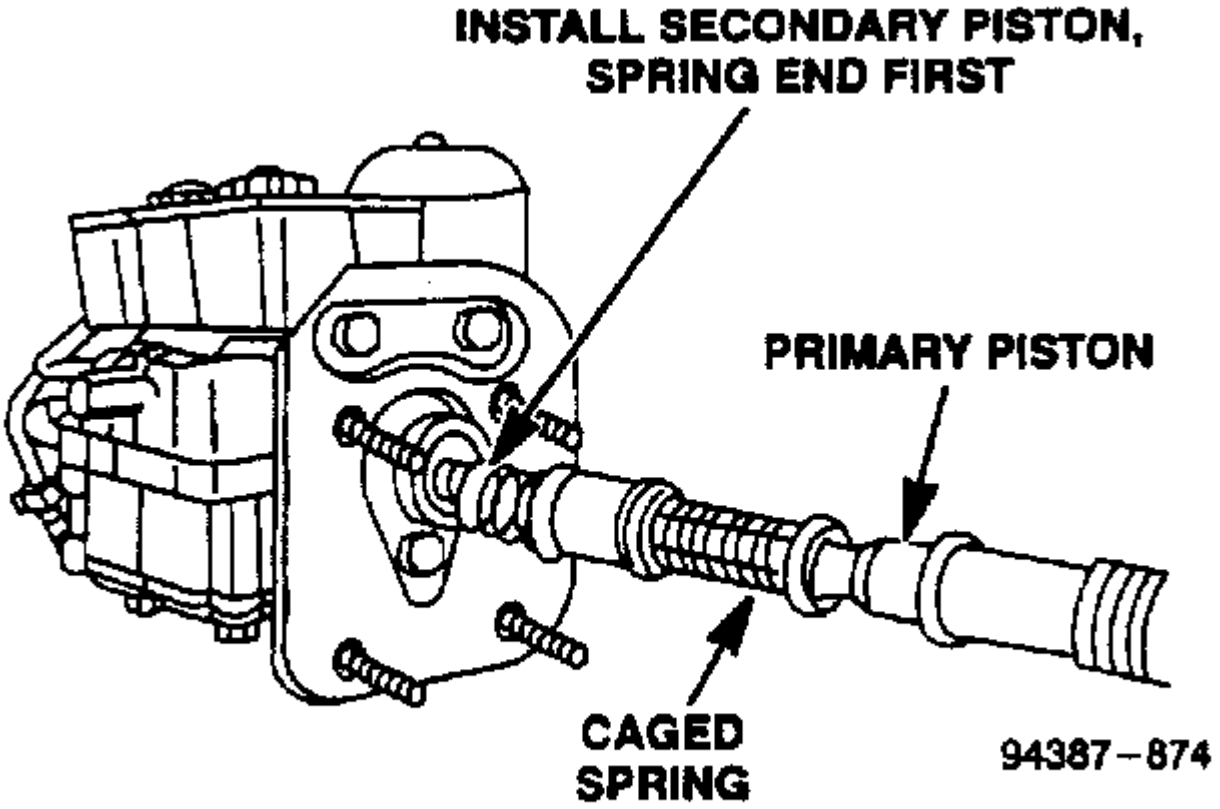
INSTALL SECONDARY PISTON,
SPRING END FIRST
PRIMARY PISTON
CAGED
SPRING
94387-874

Figure 7

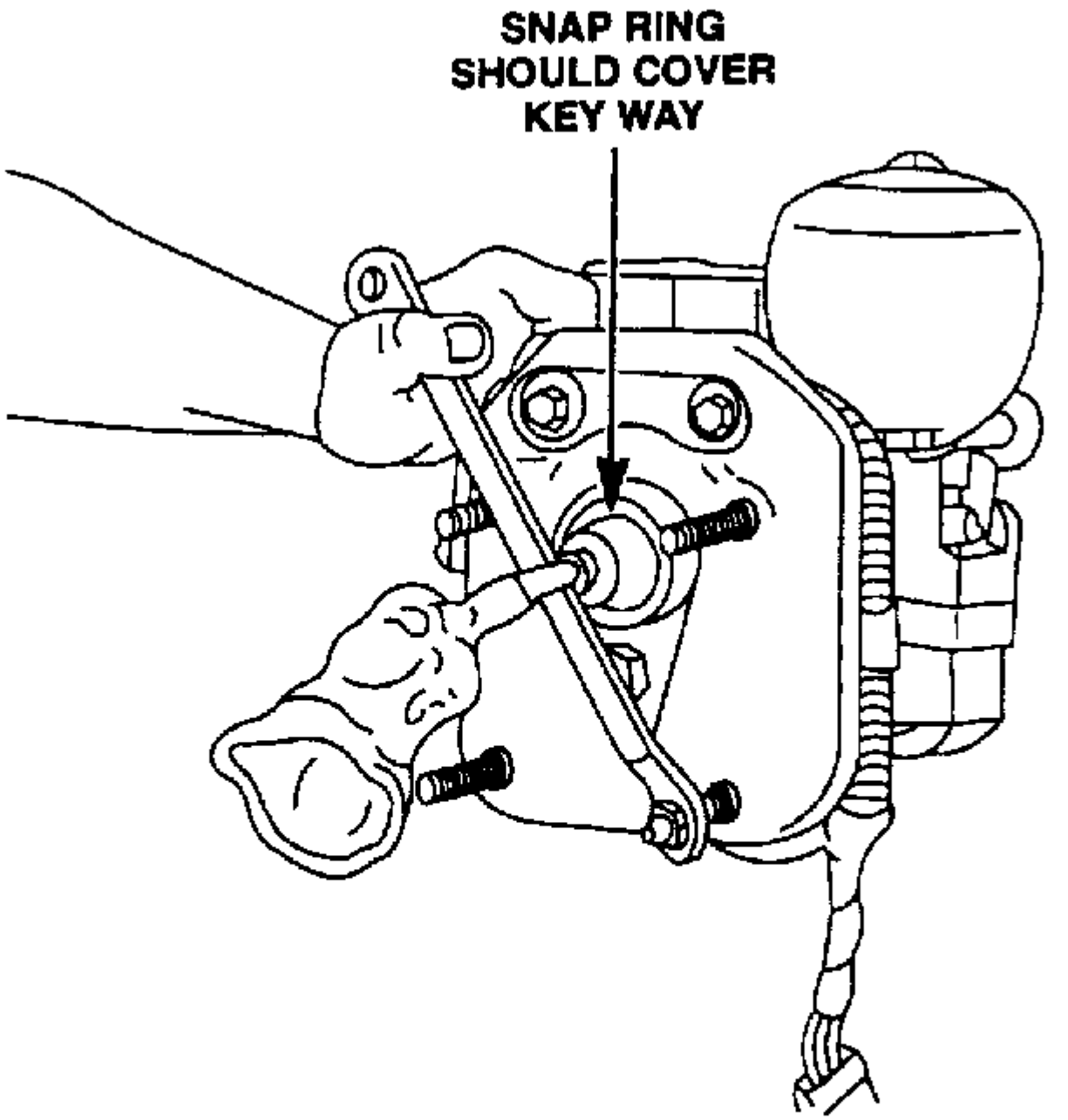

94387-875

Figure 8

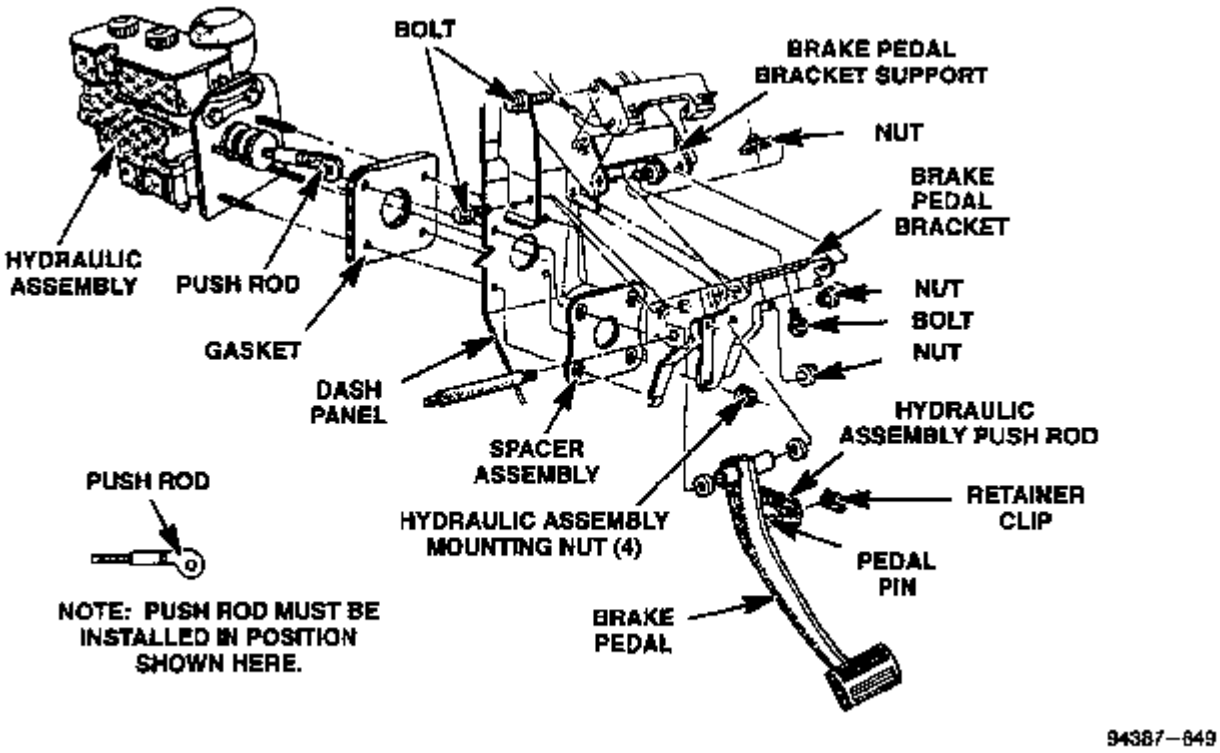
BOLT
BRAKE PEDAL BRACKET SUPPORT
NUT
BRAKE PEDAL BRACKET
HYDRAULIC ASSEMBLY
PUSH ROD
NUT
BOLT
NUT
GASKET
DASH PANEL
HYDRAULIC ASSEMBLY PUSH ROD
SPACER ASSEMBLY
PUSH ROD
RETAINER CLIP
HYDRAULIC ASSEMBLY MOUNTING NUT (4)
PEDAL PIN
NOTE: PUSH ROD MUST BE INSTALLED IN POSITION SHOWN HERE.
BRAKE PEDAL
94387–649

Figure 9

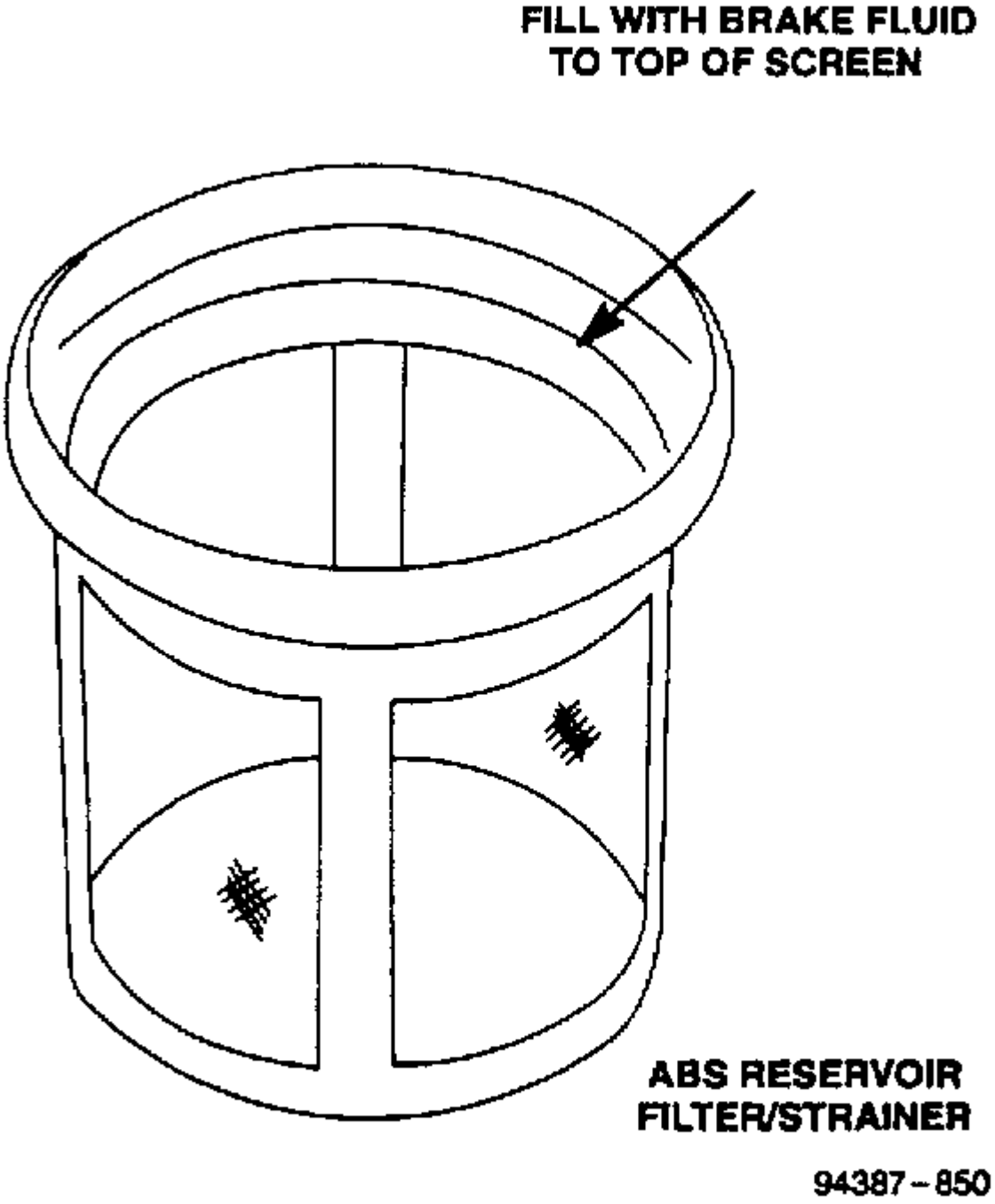
FILL WITH BRAKE FLUID
TO TOP OF SCREEN
ABS RESERVOIR
FILTER/STRAINER
94387-850

Figure 10

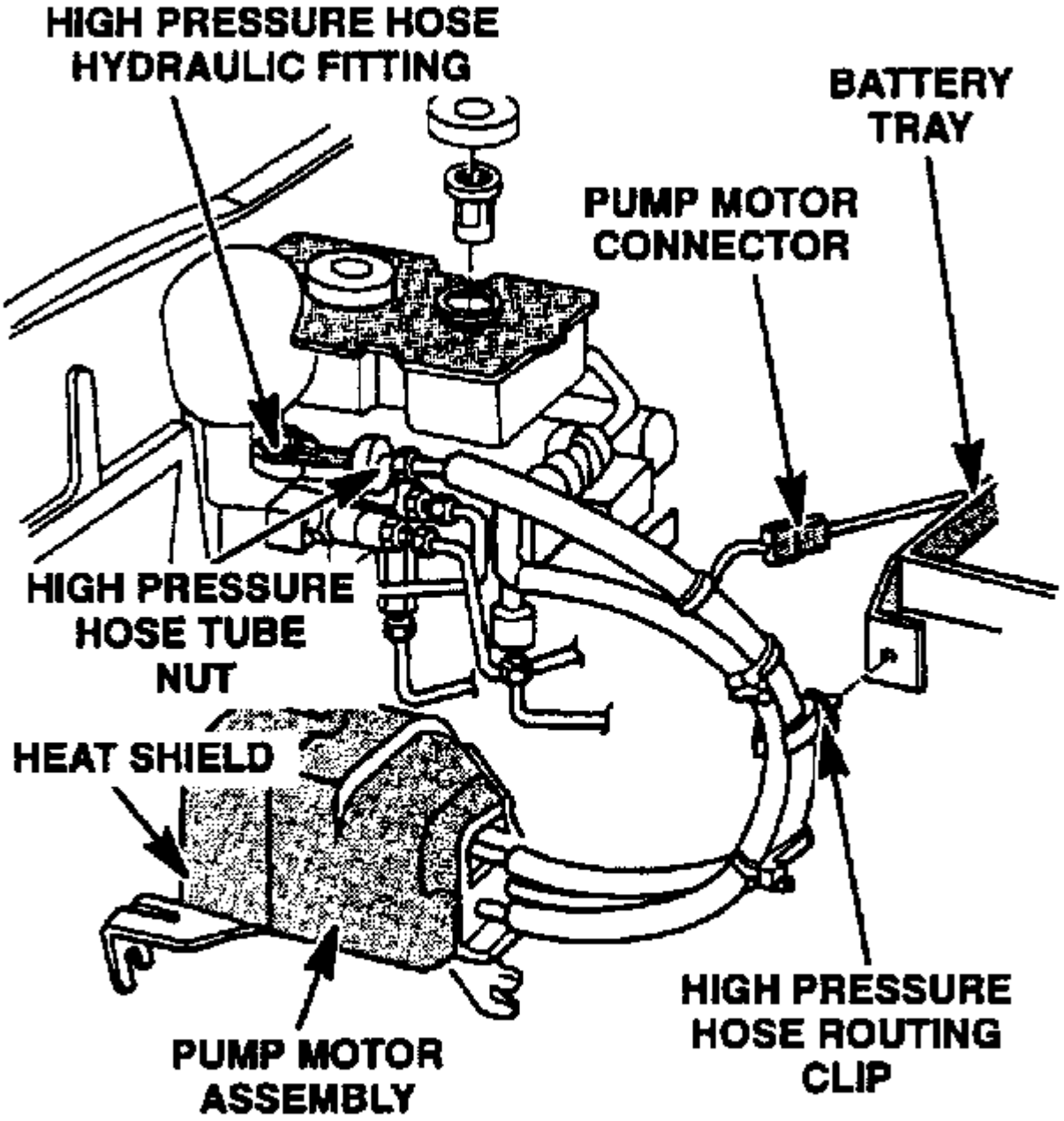

94387–847

Figure 11

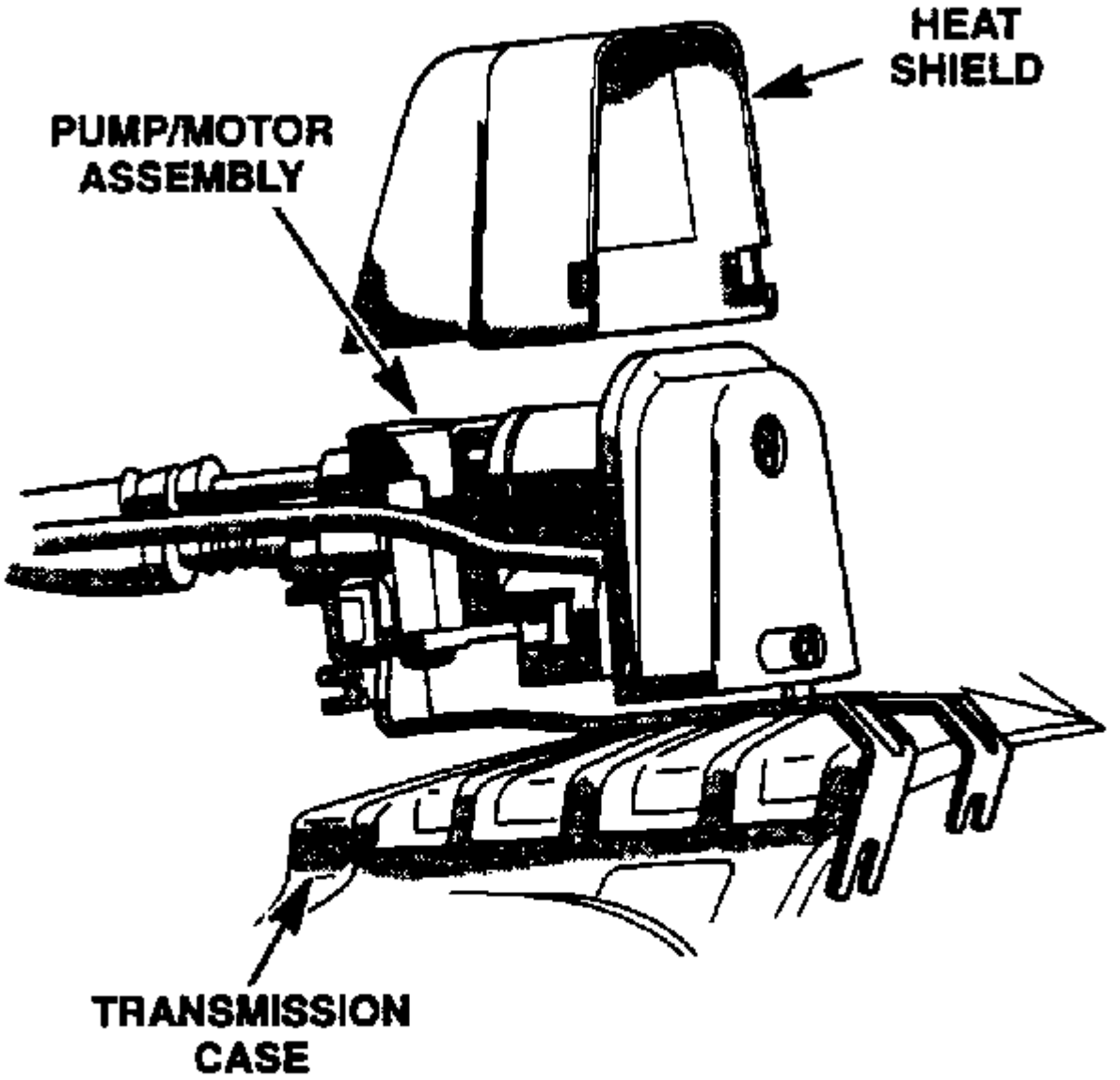

94387–846

Figure 12