NO: 05-24-94

SUBJECT: ABS Component Service Procedure - Bendix 10

DATE: Nov. 18, 1994

THIS BULLETIN SUPERSEDES TECHNICAL SERVICE BULLETIN 05-14-92 DATED JAN. 4, 1993 WHICH SHOULD BE NOTED IN YOUR FILES AND THE 1992 TECHNICAL SERVICE BULLETIN MANUAL (PUBLICATION 81-699-0400). THIS REVISION ADDS 1993 MODEL VEHICLES AND ACTUATOR PISTON ASSEMBLY REPAIR.

THIS BULLETIN APPLIES TO VEHICLES EQUIPPED WITH BENDIX 10 ABS.

DISCUSSION:

The differential pressure switch, primary pressure transducer, boost pressure transducer, pump supply filter and **actuator piston assemblies** are now available for service. The part numbers and the service procedure for replacement of each of these parts is described below.

PARTS REQUIRED:

Quantity	Part No.	Description
1	4509003	Switch, Differential Pressure
1	4485633	Transducer, Primary Pressure
1	4485633	Transducer, Boost
1	4485606	Filter - AC and AY Body
1	**4740368**	Filter - AS Body
2	**153455**	Clamps, Hose
1	4740084	Actuator Piston Assembly Kit, AC and AY Body Vehicles
1	4740086	Actuator Piston Assembly Kit, AS Body Vehicles

REPAIR PROCEDURE:

This bulletin describes the removal and installation procedures for the differential pressure switch, primary and boost pressure transducers, the pump supply filter and the **actuator piston assemblies.**

WARNING: FAILURE TO DE-PRESSURIZE THE HYDRAULIC ACCUMULATOR, BEFORE PERFORMING THESE OPERATIONS, MAY RESULT IN PERSONAL INJURY AND OR DAMAGE TO PAINTED SURFACES. WEAR SAFETY GOGGLES WHEN DISCONNECTING FLUID LINES. KEEP WORK AREA CLEAN. AVOID CONTAMINATION OF SYSTEM COMPONENTS WITH DIRT OR FOREIGN MATERIAL.

DIFFERENTIAL PRESSURE SWITCH REPLACEMENT

1. With the ignition key in the OFF position, discharge the ABS accumulator by pumping the brake pedal a minimum of 40 times.
2. Disconnect the primary pressure transducer connector which will expose the differential pressure switch connector.

3. Disconnect the differential pressure switch connector from the ABS harness, not at the switch.

   NOTE: THE CONNECTOR IS MOLDED ON AT THE SWITCH.

4. Remove the differential pressure switch and connector from the actuator housing (Figure 1).
5. Install the new differential pressure switch into the actuator housing. Tighten to 1.35 - 1.81 Nm (12 - 16 in. lbs.).
6. Connect the differential pressure switch connector and the primary pressure transducer connector.

PRIMARY PRESSURE TRANSDUCER REPLACEMENT

1. With the ignition key in the OFF position, discharge the ABS accumulator by pumping the brake pedal a minimum of 40 times.
2. Drain and remove the master cylinder reservoir by removing the three pins that hold it in place.
3. Disconnect the primary pressure transducer connector.
4. Using special tool #6684 (Figure 2), remove the primary pressure transducer from the actuator housing.
5. Install the new primary pressure transducer into the actuator housing and torque to 9 - 14 Nm (80 - 124 in. lbs.).
6. Connect the primary pressure transducer connector.
7. Install the master cylinder reservoir.
8. Bleed the left front and right rear brake circuits (primary circuit).
9. Fill the master cylinder reservoir using fresh, clean brake fluid such as Mopar or equivalent, conforming to DOT 3 requirements.

BOOST PRESSURE TRANSDUCER REPLACEMENT

1. With the ignition key in the OFF position, discharge the ABS accumulator by pumping the brake pedal a minimum of 40 times.
2. Disconnect the dual function pressure switch and boost pressure transducer connectors.
3. Use special tool #6607 to remove the dual function pressure switch from the actuator housing. Using special tool #6684, remove the boost pressure transducer from the actuator housing (Figure 3).
4. Install the boost pressure transducer into the actuator housing and torque to 9 - 14 Nm (80 - 124 in. lbs.). Install the dual function pressure switch and torque to 9 - 14 Nm (80 - 124 in. lbs.).
5. Connect the dual function pressure switch and the boost pressure transducer connectors.
6. Turn the ignition key to the ON position and allow the pump to run to purge air from the system. When the pump turns off, turn the ignition key to the OFF position and pump the brake pedal 40 times.
7. Fill the master cylinder reservoir using fresh, clean brake fluid such as Mopar or equivalent, confirming to DOT 3 requirements.

PUMP SUPPLY FILTER REPLACEMENT - AS BODY

1. Remove one reservoir cap.
2. With the ignition key in the OFF position, discharge the ABS accumulator by pumping the brake pedal a minimum of 40 times.
3. Install the reservoir cap.
4. Remove the pump supply hose from the steel tube at the front of the actuator assembly. Cap the steel tube leading from the actuator assembly.
5. Remove the tie wrap at the end of the pump supply hose sheath covering and pull down the

sheath covering to expose the pump supply filter.

6. Remove the hose clamps and pump supply filter from the hose sections. Discard the hose clamps and filter (Figure 4).
7. Install the new pump supply filter onto the two hose sections. Position the new hose claims onto the hose over the filter nipples and torque to 1.0 - 2.0 Nm (9 - 18 in. lbs.). Position the sheath over filter and hoses. Install a new tie wrap over the end of the sheath.
8. Remove the cap from the steel tube and install the pump supply hose onto the steel tube at the front of the actuator. Position the hose clamp over the end of the steel tube and torque the clamp to 1.0 - 2.0 Nm (9 - 18 in. lbs.).
9. Turn the ignition key to the ON position and allow the pump to run to purge air from the system. When the pump turns off, turn the ignition key to the OFF position and pump the brake pedal a minimum of 40 times.
10. Check the fluid level in the reservoir and fill, if necessary, using fresh, clean brake fluid such as Mopar or equivalent, conforming to DOT 3 requirements.

PUMP SUPPLY FILTER REPLACEMENT - AC AND AY BODY

1. Remove one reservoir cap.
2. With the ignition key in the OFF position, discharge the ABS accumulator pressure by pumping the brake pedal a minimum of 40 times.
3. Install the reservoir cap.
4. Remove the hose clamps and pump supply filter at the front the actuator assembly (Figure 2). Cap the supply hose leading from the actuator assembly. Discard hose clamps and filter.
5. Remove and install the new pump supply filter from the Clip on the front of the actuator assembly (Figure 5).
6. Remove the cap from the supply hose. Install both hoses onto the pump supply filter and torque clamps to 1.0 - 2.0 Nm (9 - 18 in. lbs.).
7. Turn the ignition key to the ON position and allow the pump to run to purge air from the system. When the pump turns off, turn the ignition key to the OFF position and pump the brake pedal a minimum of 40 times.
8. Check the fluid level in the reservoir and fill, if necessary, using fresh, clean brake fluid such as Mopar or equivalent, conforming to DOT 3 requirements.

TESTING FOR INTERNAL LEAKS

If an internal leak is suspected in the ABS circuit, a test fixture has been developed to assist in the diagnostics. This fixture will assist in determining if there is an internal leak, and if the leak is within the hydraulic unit or the pump motor assembly. It can be used whether the pump shuts off or not.

INSTALLING THE INTERNAL LEAK TEST FIXTURE #6685

1. With the ignition key in the OFF position, discharge the ABS system by pumping the brake pedal a minimum of 40 times.
2. Locate the high pressure hose end fitting and remove the high pressure hose tube nut from the high pressure hose hydraulic fitting.
3. Verify the shut off valve on the internal leak test fixture is OPEN and install it in line with the high pressure hose (Figure 6). Screw the male end into the hydraulic unit, then the hose into the leak test fixture. The pressure gauge should be on the high pressure hose side of the shut off switch.
4. Install MST-6163 pressure tester into the hydraulic unit.
5. Refer to the "Hydraulic Pressure Performance Test" in the **1993 Antilock-10 Diagnostic Manual (Publication No. 81-699-0322)** for the diagnostic tree.

** ACTUATOR PISTON ASSEMBLIES

1. With the ignition key in the OFF position, discharge the ABS accumulator by pumping the brake pedal 40 times.
2. Remove the hydraulic unit from the vehicle as outlined in the appropriate service manual, and place on a clean, dry work bench.
3. Secure the hydraulic unit in a vise (Figure 7). Do not over tighten.
4. Remove the flange gasket from the hydraulic assembly mounting bracket/dash board.
5. Loosen the dash mounting bracket from the hydraulic actuator assembly enough to separate the black dust boot from the actuator housing, re-tighten bracket.
6. Place a 1/2" box end wrench over the lower mounting stud of the hydraulic unit, see (Figure 8). Place a nut onto the stud and turn it enough to engage the threads 100%. Make sure that the wrench is aligned, as illustrated in (Figure 2), on the input rod bearing.
7. Push in on the wrench against the bearing, moving the bearing inward approximately 1/4", to relieve the bearing load from the snap ring.
8. Rotate the open end of the snap ring near the 12 o'clock position. Place a small screwdriver in the 12 o'clock keyway on the actuator, (Figure 9). Pry the snap ring down and out of the groove with the screwdriver and pull the snap ring out of end of the actuator. Discard the snap ring.
9. Slowly release the wrench from the bearing, allowing the primary piston assembly to pop out. Catch any fluid from the actuator bore in a suitable container as the primary piston is removed.
10. Slowly pull the piston out of the actuator bore, keep the assembly as straight as possible. Do not pull forcefully, (if piston catches in the bore, push the piston back into the bore a short distance to align, and try again to remove the piston).

NOTE: IF THE PISTON STILL WILL NOT COME OUT OF THE ACTUATOR BORE THEN THE ACTUATOR HOUSING MUST BE REPLACED.

11. Remove the hydraulic assembly from the vise and place, stud side down, on a bench on a lint free cloth (Figure 10).
12. Place a cloth over the outlet ports of the unit. While holding the cloth in place, apply pressure from a regulated air nozzle to the front of the actuator, to expel the secondary piston assembly from the bore (Figure 11).
13. Place the hydraulic unit back into the vise and clamp securely.
14. Using the swab provided, apply clean brake fluid and thoroughly clean the bore of the hydraulic unit. Wipe the entire circumference of the bore and work any particles toward the open end of the bore. Flush the bore, after swabbing, with clean brake fluid.
15. Using clean brake fluid, lubricate the new pistons. Wet the cup seals, white ring seals and the 0-rings.
16. Install the secondary piston, spring end first, into the actuator bore (Figure 12). Ensure the seal cup is not folded back or twisted. Push the secondary piston in until the rear end of the piston is flush with the actuator bore opening (Figure 13).
17. Position the caged spring at the end of the primary piston assembly over the pin on the rear of the secondary piston (Figure 12). The caged spring must remain over this pin throughout the installation procedure.
18. Slowly, push both piston assemblies into the actuator bore. Do not cut, nick or twist any of the seals, or the unit will not function properly.
19. Place the new snap ring over the master cylinder push rod and bearing.
20. Push the piston assemblies all the way into the bore, compressing the springs. The shoulder of the bearing should be in past the snap ring groove.
21. Secure the piston in the bore with a nut and wrench, in the same manner as used during removal of the snap ring.
22. With the keyway at the top of the bore, in the 12 o'clock position, position the snap ring so that one end is in 10 o'clock position and the other end is in the 8 o'clock position (Figure 14). The snap ring should cover the keyway at the 12 o'clock position.
23. Place the 10 o'clock end of the snap ring into the snap ring groove. Use a flat blade screwdriver, push the snap ring into the groove, working in a clockwise direction. Ensure the

snap ring and both ends are seated completely into the groove.

24. Slowly release the wrench, then remove the nut and wrench from the stud.
25. Loosen the dash mounting bracket from the hydraulic unit. Install the rubber dust boot over the actuator bore flange and seat the retaining ring into the groove and re-tighten bracket.
26. Install the hydraulic unit, with new mounting gasket, as outlined in the appropriate Service Manual.
27. Ensure the brake system is functioning as designed.**

POLICY:

Reimbursable within the provisions of the warranty.

TIME ALLOWANCE:

Labor Operation No.	Time	
05-45-02-90	(Differential Pressure Switch)	0.8 Hrs.
05-45-03-90	(Primary Pressure Transducer)	1.4 Hrs.
05-45-03-91	(Boost Transducer)	1.0 Hrs.
05-45-04-90	(Pump Supply Filter)	0.6 Hrs.
**05-40-07-93	(Actuator Piston Assemblies)	2.7 Hrs.**

FAILURE CODE:

Code	Description
58	Internal Defect

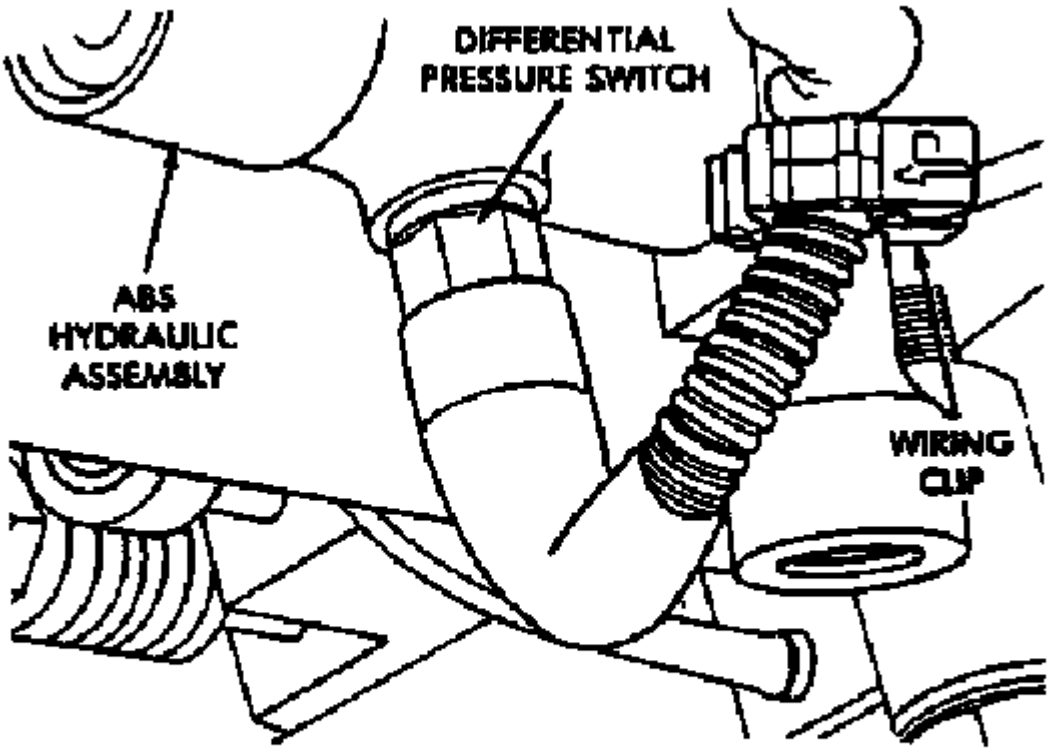
DIFFERENTIAL
PRESSURE SWITCH
ABS
HYDRAULIC
ASSEMBLY
WIRING
CLIP

Figure 1

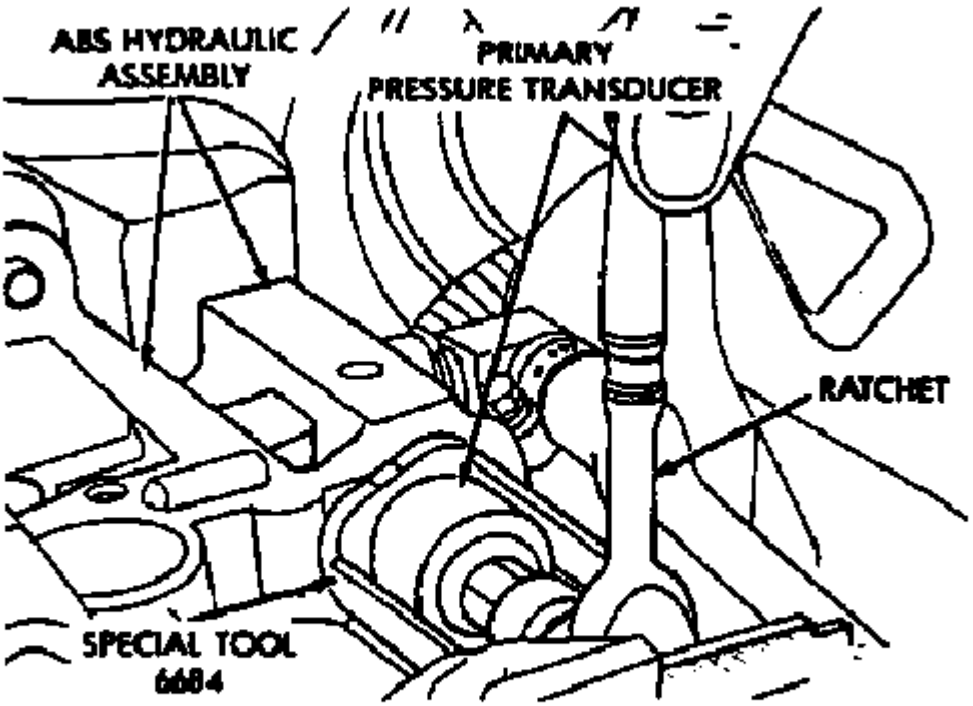

Figure 2

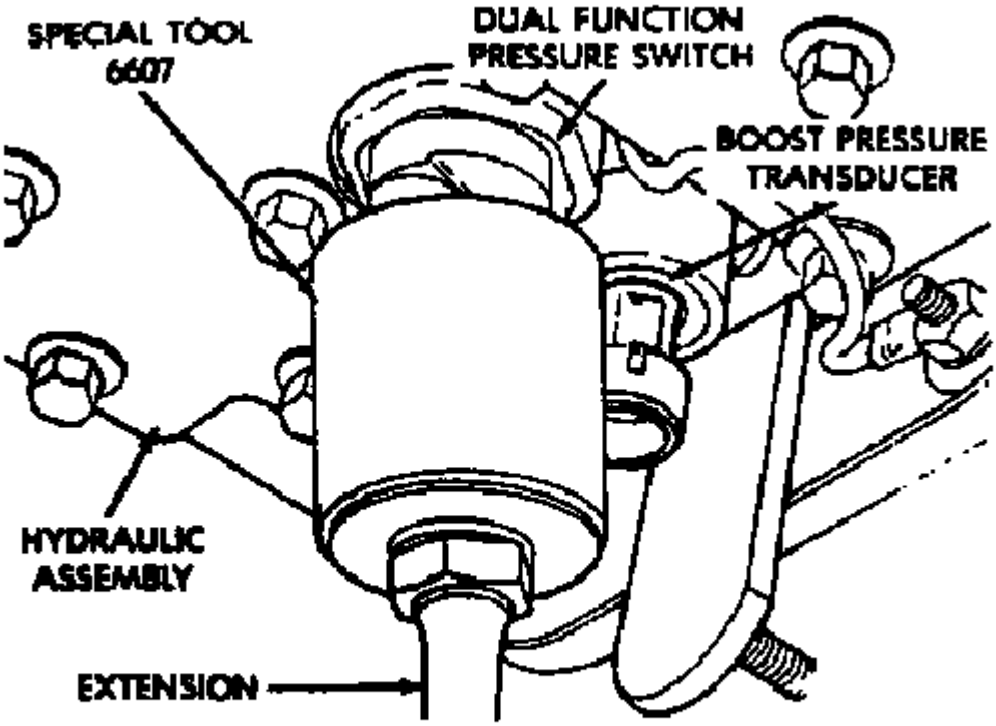

Figure 3

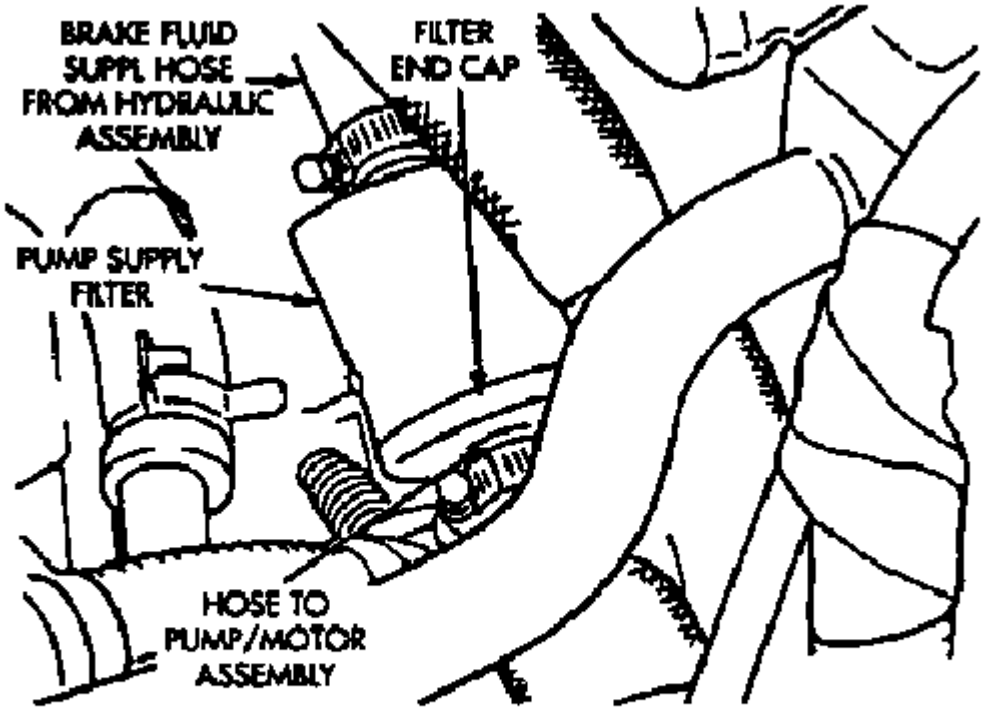

Figure 4

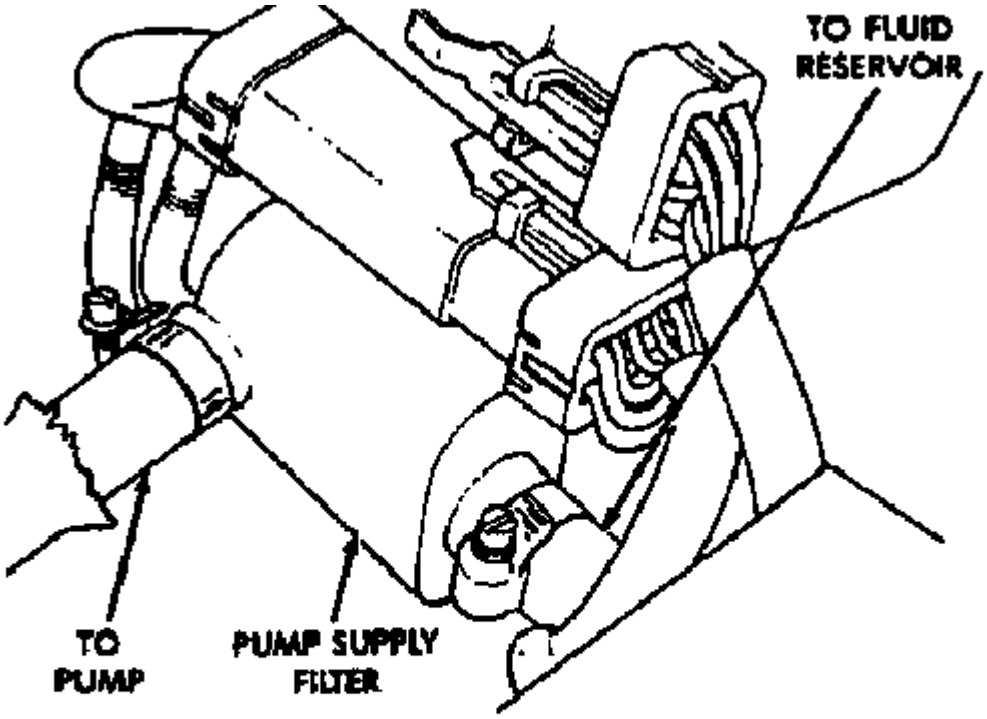

Figure 5

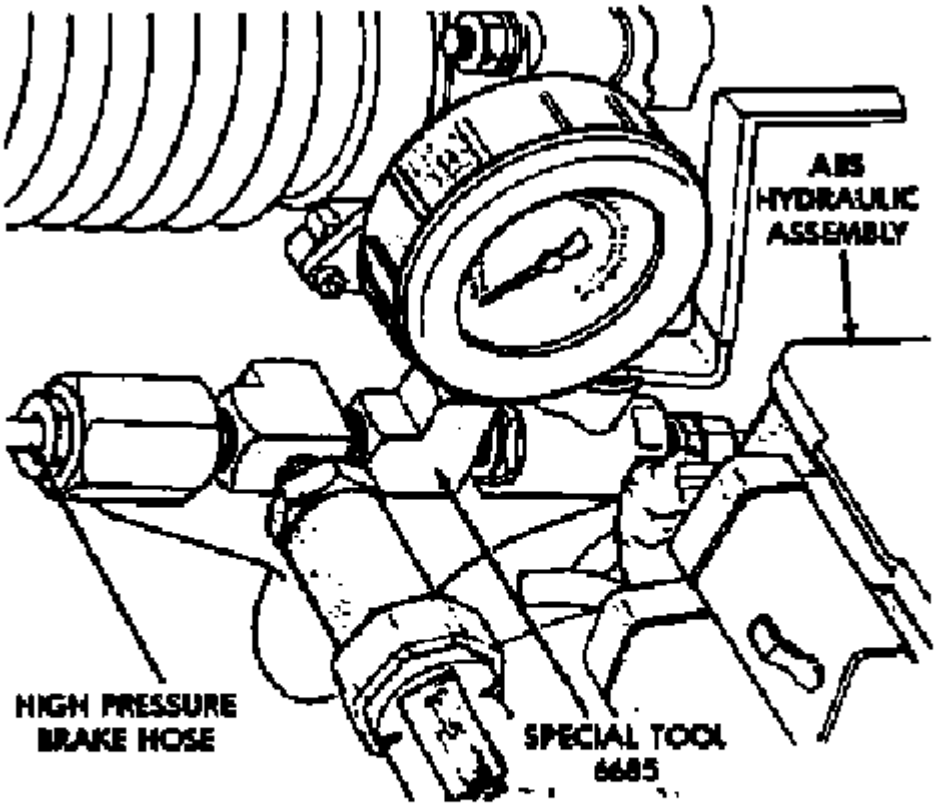
ABS
HYDRAULIC
ASSEMBLY
HIGH PRESSURE
BRAKE HOSE
SPECIAL TOOL
6685

Figure 6

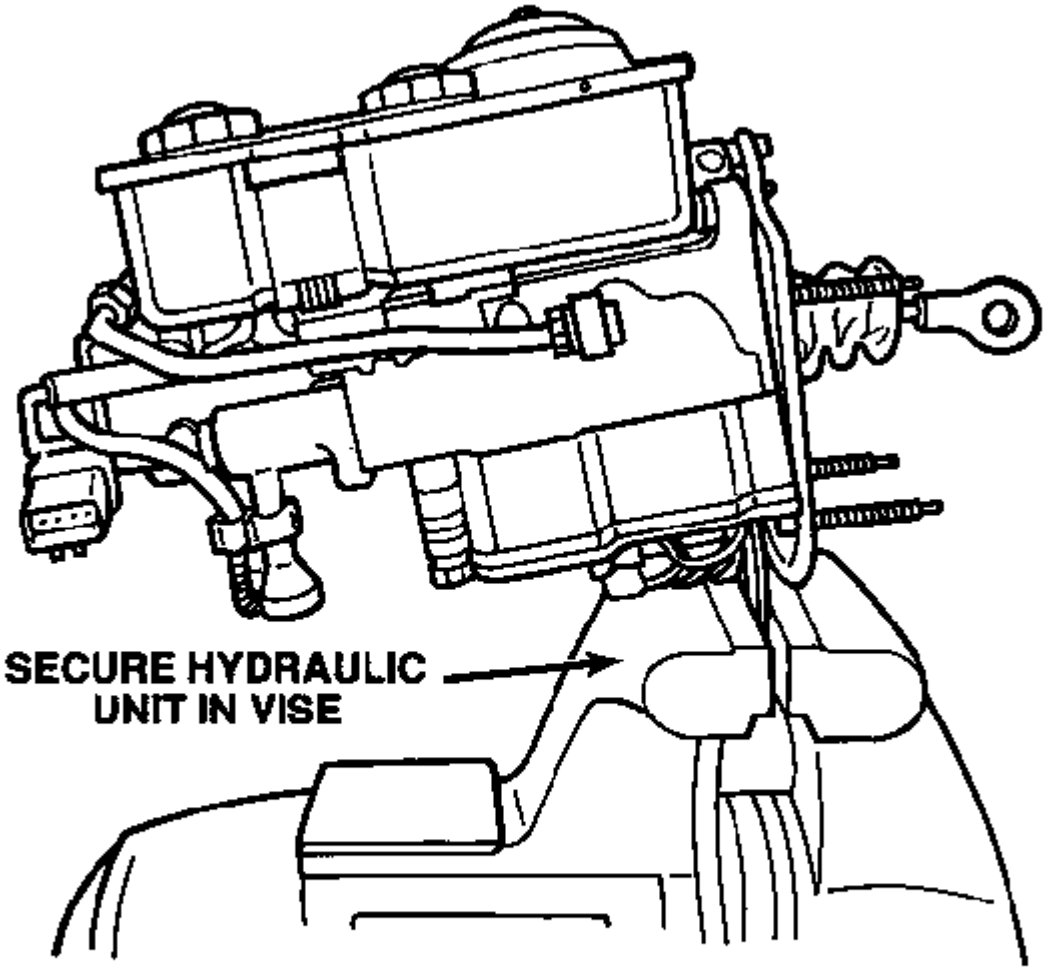

Figure 7

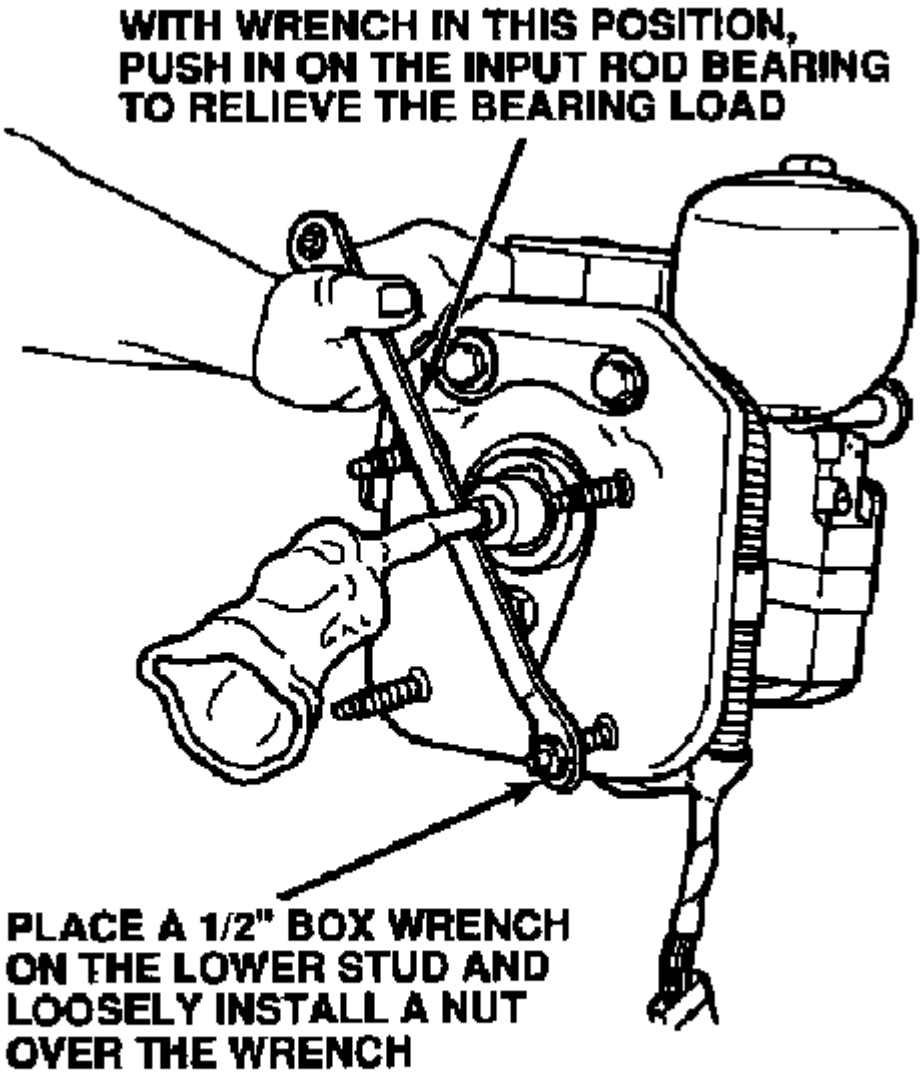
WITH WRENCH IN THIS POSITION,
PUSH IN ON THE INPUT ROD BEARING
TO RELIEVE THE BEARING LOAD
PLACE A 1/2" BOX WRENCH
ON THE LOWER STUD AND
LOOSELY INSTALL A NUT
OVER THE WRENCH

Figure 8

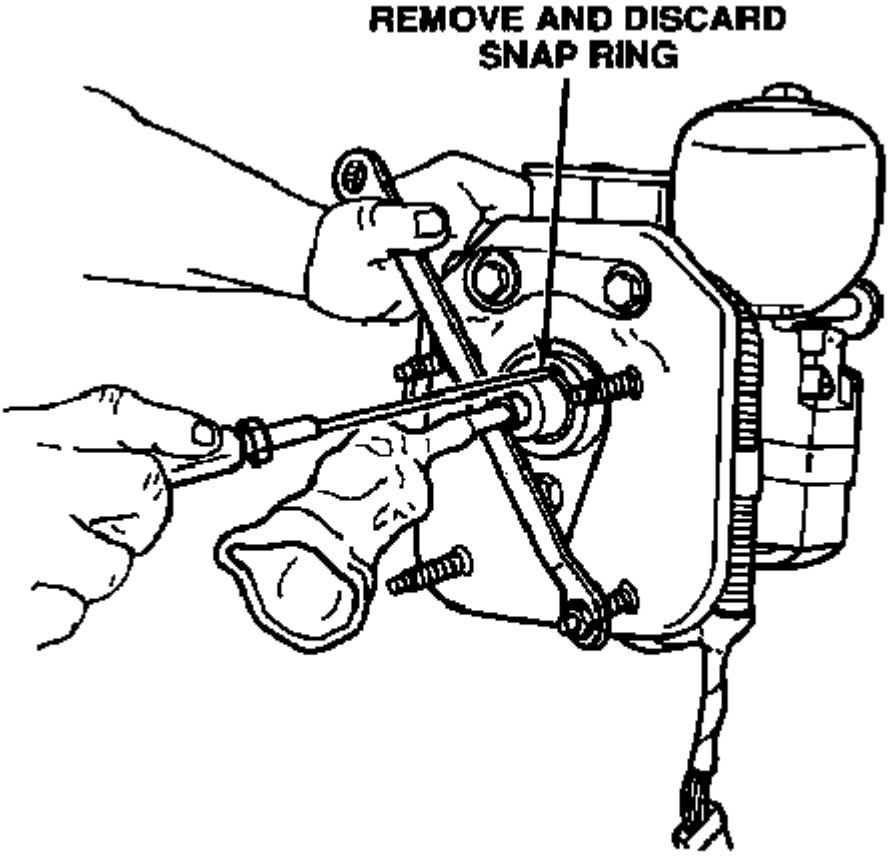

Figure 9

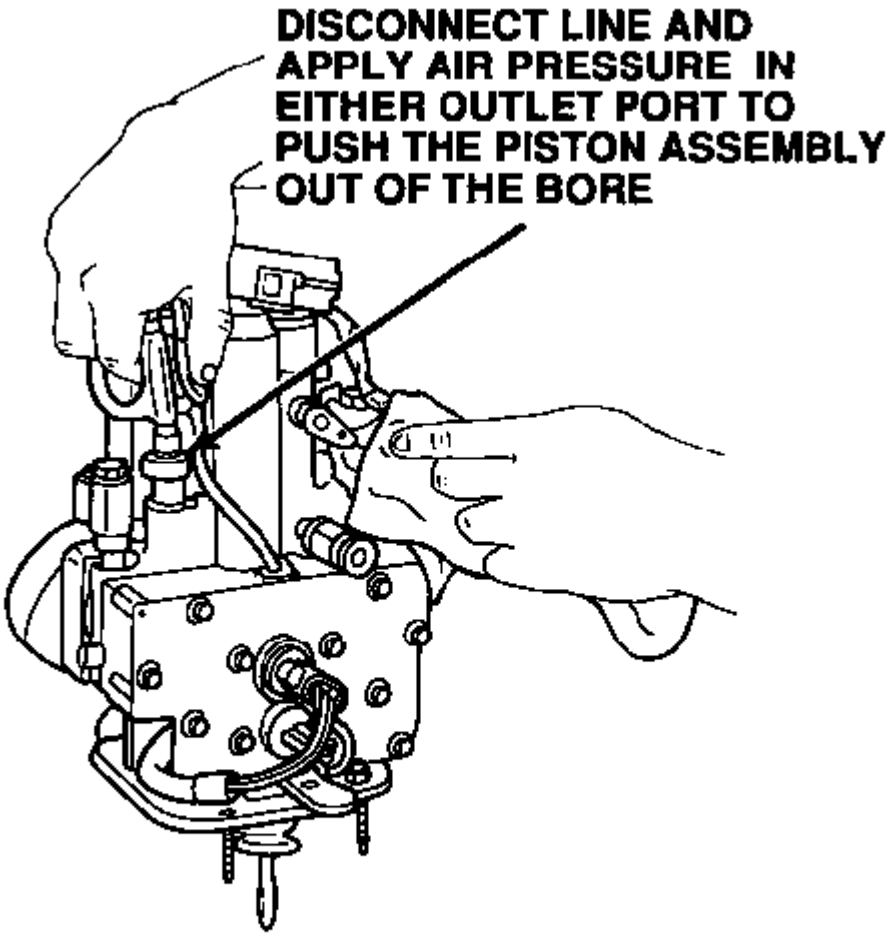
DISCONNECT LINE AND
APPLY AIR PRESSURE IN
EITHER OUTLET PORT TO
PUSH THE PISTON ASSEMBLY
OUT OF THE BORE

Figure 10

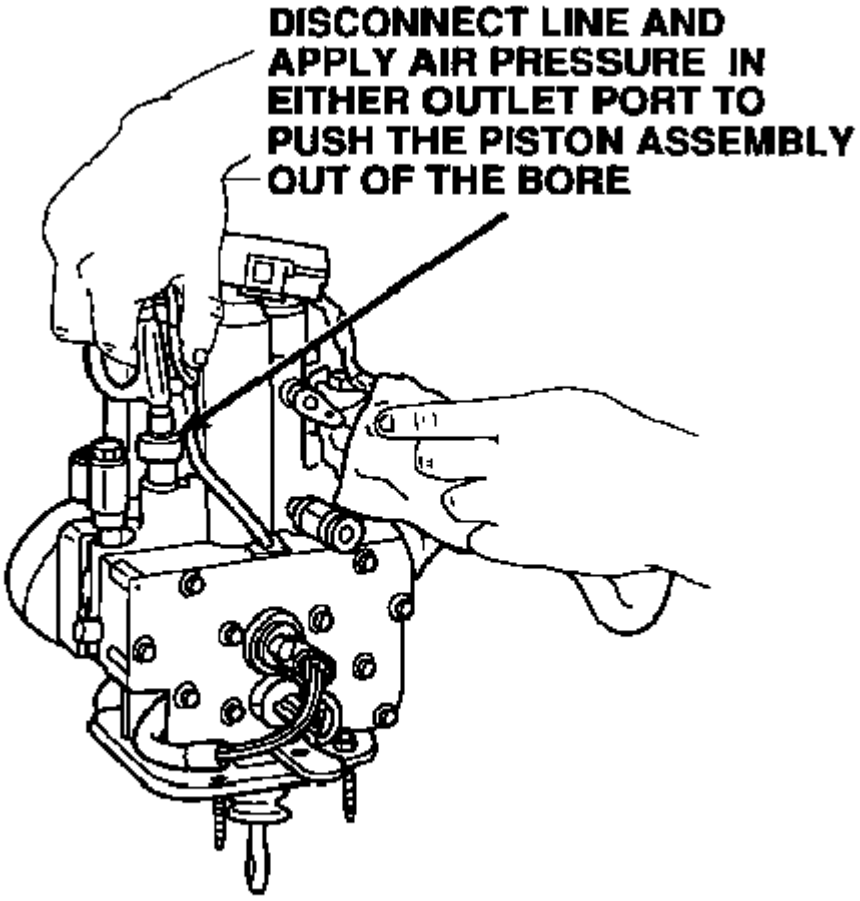
DISCONNECT LINE AND
APPLY AIR PRESSURE IN
EITHER OUTLET PORT TO
PUSH THE PISTON ASSEMBLY
OUT OF THE BORE

Figure 11

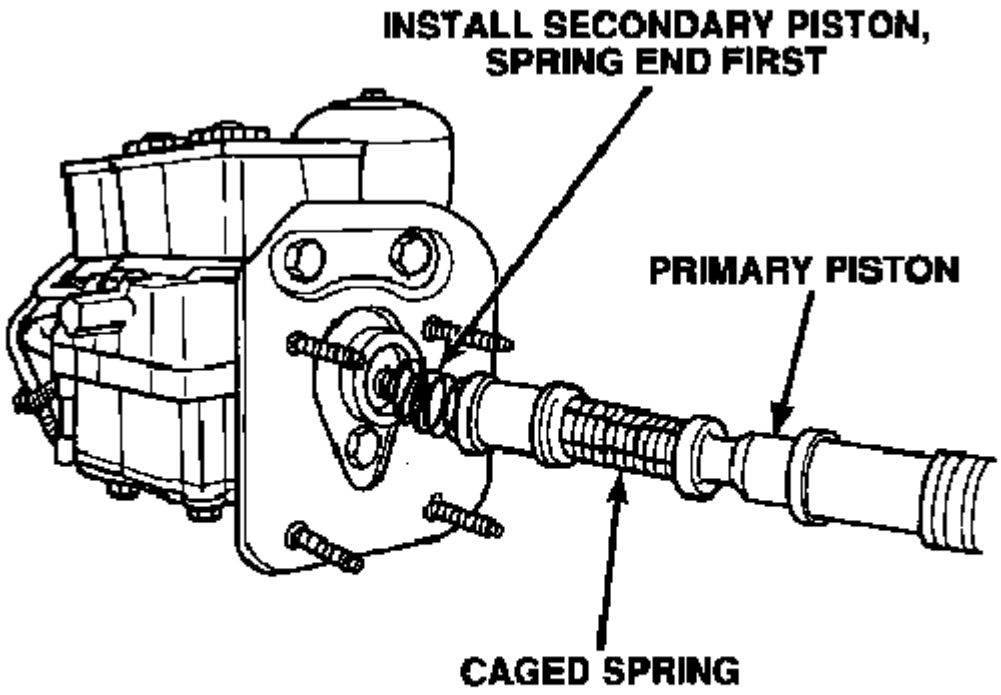
INSTALL SECONDARY PISTON,
SPRING END FIRST
PRIMARY PISTON
CAGED SPRING

Figure 12

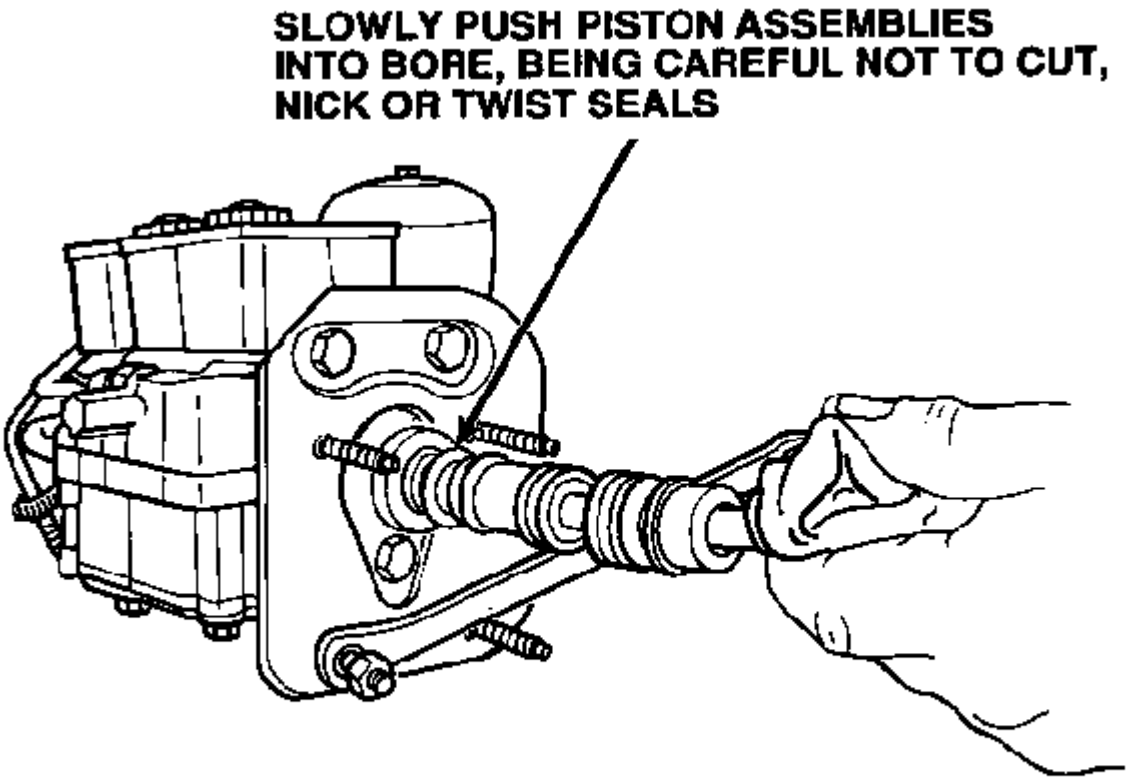
SLOWLY PUSH PISTON ASSEMBLIES
INTO BORE, BEING CAREFUL NOT TO CUT,
NICK OR TWIST SEALS

Figure 13

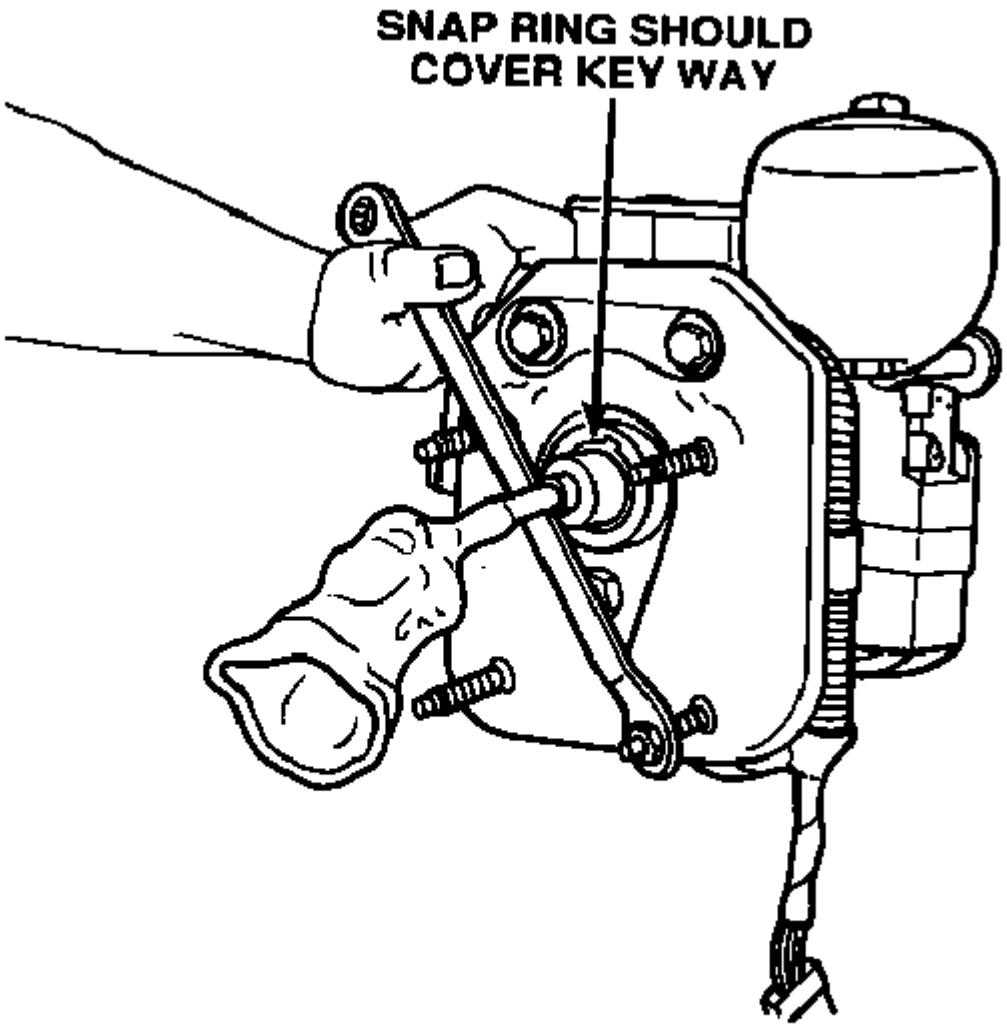

Figure 14